duma rent
www.duma-rent.com

BOMAG
FAYAT GROUP

Operating instructions
Maintenance instructions

Original operating instructions

BW 100 AD-4 / BW 120 AD-4 / BW 125 AD-4

BW 100 AC-4 / BW 120 AC-4 / BW 125 AC-4

S/N 101 880 06 .... > / S/N 101 880 16 .... > / S/N 101 880 08 .... > / S/N 101 880 14 .... > / S/N 101 880 10 .... >
S/N 101 880 07 .... > / S/N 101 880 17 .... > / S/N 101 880 09 .... > / S/N 101 880 15 .... > / S/N 101 880 11 .... >

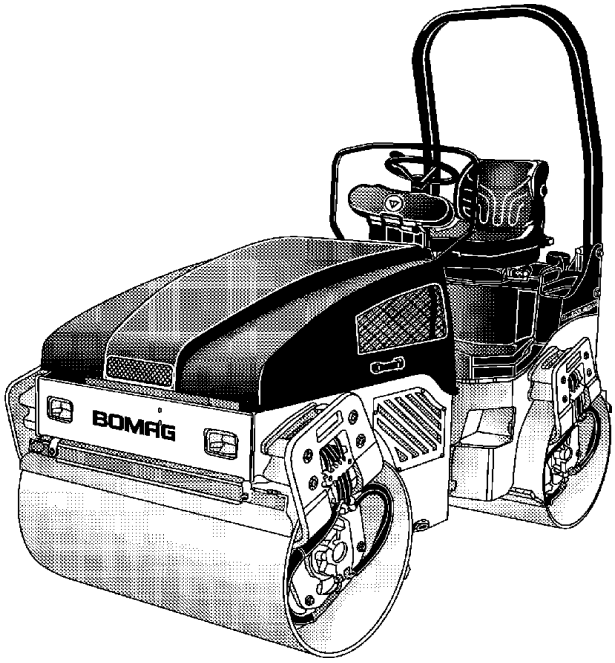

Tandem Vibratory Roller

Combination Roller

Catalogue No.
008 053 01

01/2012

If the machine is equipped with a battery :

CALIFORNIA
Proposition 65 Warning

Battery posts, terminals and related accessories contain lead and lead compounds, chemicals known to the State of California to cause cancer and birth defects or other reproductive harm.
Wash hands after handling.

If the machine is equipped with a diesel engine :

CALIFORNIA
Proposition 65 Warning

The engine exhaust and some of its constituents are known to the state of California to cause cancer, birth defects, and other reproductive harm.

duma » rent www.duma-rent.com

1 Foreword

These BOMAG machines are products from the wide product range of BOMAG machines for earth and asphalt construction, refuse compaction and stabilizing/recycling.

BOMAG's vast experience in connection with state-of-the-art production and testing methods, such as lifetime tests of all important components and highest quality demands guarantee maximum reliability of your machine.

This manual comprises:

- Safety regulations
- Operating instructions
- maintenance instructions
- Trouble shooting

Using these instructions will

- help you to become familiar with the machine.
- avoid malfunctions caused by unprofessional operation.

Compliance with the maintenance instructions will

- enhance the reliability of the machine on construction sites,
- prolong the lifetime of the machine,
- reduce repair costs and downtimes.

BOMAG will not assume liability for the function of the machine

- if it is handled in a way not complying with the usual modes of use,
- if it is used for purposes other than those mentioned in these instructions.

No warranty claims can be lodged in case of damage resulting from

- operating errors,
- insufficient maintenance and
- wrong fuels and lubricants.

Please note!

This manual was written for operators and maintenance personnel on construction sites.

Always keep this manual close at hand, e.g. in the tool compartment of the machine or in a specially provided container. These operating and maintenance instructions are part of the machine.

You should only operate the machine after you have been instructed and in compliance with these instructions.

Strictly observe the safety regulations.

Please observe also the guidelines of the Civil Engineering Liability Association "Safety Rules for the Operation of Road Rollers and Soil Compactors" and all relevant accident prevention regulations.

For your own personal safety you should only use original spare parts from BOMAG.

For your machine BOMAG offers service kits to ease maintenance.

In the course of technical development we reserve the right for technical modifications without prior notification.

These operating and maintenance instructions are also available in other languages.

Apart from that, the spare parts catalogue is available from your BOMAG dealer against the serial number of your machine.

Your BOMAG dealer will also supply you with information about the correct use of our machines in soil and asphalt construction.

The above notes do not constitute an extension of the warranty and liability conditions specified in the general terms of business of BOMAG.

We wish you successful work with your BOMAG machine.

BOMAG GmbH

Copyright by BOMAG

Foreword

Please fill in

. . . . . .

Machine type (Fig. 1)

. . . . . .

Serial-number (Fig. 1 and 2)

. . . . . .

Engine type (Fig. 3)

. . . . . .

Engine number (Fig. 3)

i Note

Supplement the above data together with the commissioning protocol.

During commissioning our organisation will instruct you in the operation and maintenance of the machine.

Please observe strictly the safety regulations and all notes on risks and dangers!

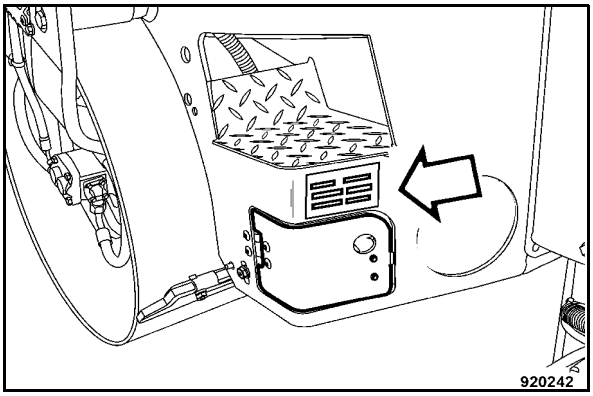

Fig. 1

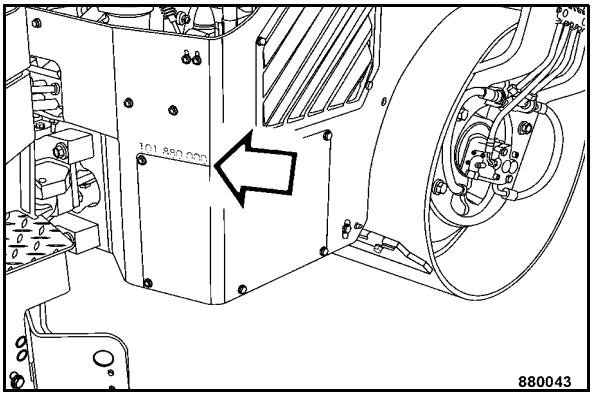

Fig. 2

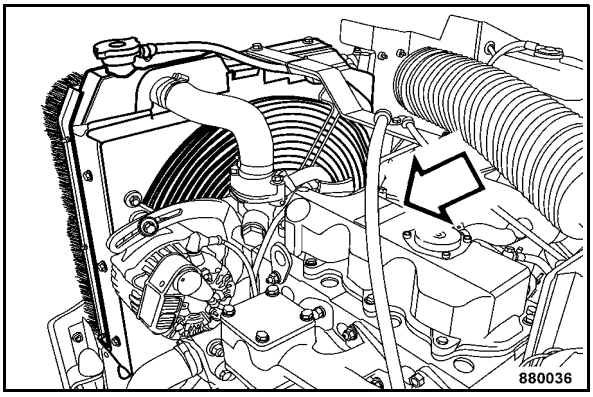

Fig. 3

Table of Contents

1	**Foreword**	**3**
2	**Technical Data**	**9**
3	**Safety regulations**	**17**
4	**Indicators and Controls**	**31**
4.1	General notes	34
4.2	Description of indicators and control elements	34
5	**Operation**	**45**
5.1	General	46
5.2	Tests before taking into operation	46
5.3	Electronic immobilizer	47
5.4	Adjusting the operator's seat	47
5.5	Starting the engine	48
5.6	Starting with jump wires	50
5.7	Driving the machine	51
5.8	Stopping the machine, operating the parking brake	53
5.9	Shutting down the engine	53
5.10	Switching the vibration on and off	54
5.11	Switching the gravity sprinkling system on and off	57
5.12	Switching the pressure sprinkling system on and off	57
5.13	Switching the tire sprinkling system on and off (only AC)	59
5.14	Actuating the emergency stop switch	59
5.15	Mounting/removing the chip spreader	60
5.16	Filling/emptying the chip spreader	62
5.17	Operating the chip spreader	63
5.18	Towing	64
5.19	Loading/transport	67
6	**Maintenance**	**71**
6.1	General notes on maintenance	72
6.2	Fuels and lubricants	73
6.3	Table of fuels and lubricants	76
6.4	Running-in instructions	77
6.5	Maintenance table	78
	Every 10 operating hours	**81**
6.6	Check the engine oil level	81
6.7	Checking the fuel level	81
6.8	Check the hydraulic oil level	82
6.9	Checking the hydraulic oil filter element	83

Table of Contents

6.10 Check the coolant level 83
6.11 Check the water separator 84
6.12 Checking the water level 84
6.13 Checking the emulsion level 85
6.14 Checking the chip spreader and cleaning the spreading beam 85

Every 50 operating hours 87
6.15 Checking fuel lines and clamps 87
6.16 Servicing the chip spreader 87

Every 250 operating hours 89
6.17 Changing engine oil and oil filter 89
6.18 Checking, cleaning, replacing the combustion air filter 91
6.19 Check the air intake lines 94
6.20 Cleaning radiator and hydraulic oil cooler 95
6.21 Checking, tensioning, replacing the V-belt 96
6.22 Checking radiator hoses and hose clamps 96
6.23 Checking, adjusting the scrapers 97

Every 500 operating hours 99
6.24 Battery service 99
6.25 Change the fuel filter 100
6.26 Drain the fuel tank sludge 101

Every 1000 operating hours 103
6.27 Checking, adjusting the valve clearance 103
6.28 Check the engine mounts 104

Every 2000 operating hours 105
6.29 Changing hydraulic oil and breather filter 105
6.30 Changing the hydraulic oil filter 106
6.31 Changing the coolant 107
6.32 Replacing the fuel lines 109
6.33 Check the injection valves 109

Every 3000 operating hours 111
6.34 Checking the fuel injection pump 111

As required 113
6.35 Checking the tire pressure 113
6.36 Cleaning the water sprinkler system 113
6.37 Draining the water sprinkler system, maintenance in case of frost 115
6.38 Filling the provision tank for the windscreen washer system 116
6.39 Tightening torques for screws with metric unified thread 116
6.40 Engine conservation 117

Table of Contents

7 Trouble shooting 119

7.1 General notes 120

7.2 Engine 121

8 Disposal 123

8.1 Final shut-down of machine 124

Table of Contents

2 Technical Data

Technical Data

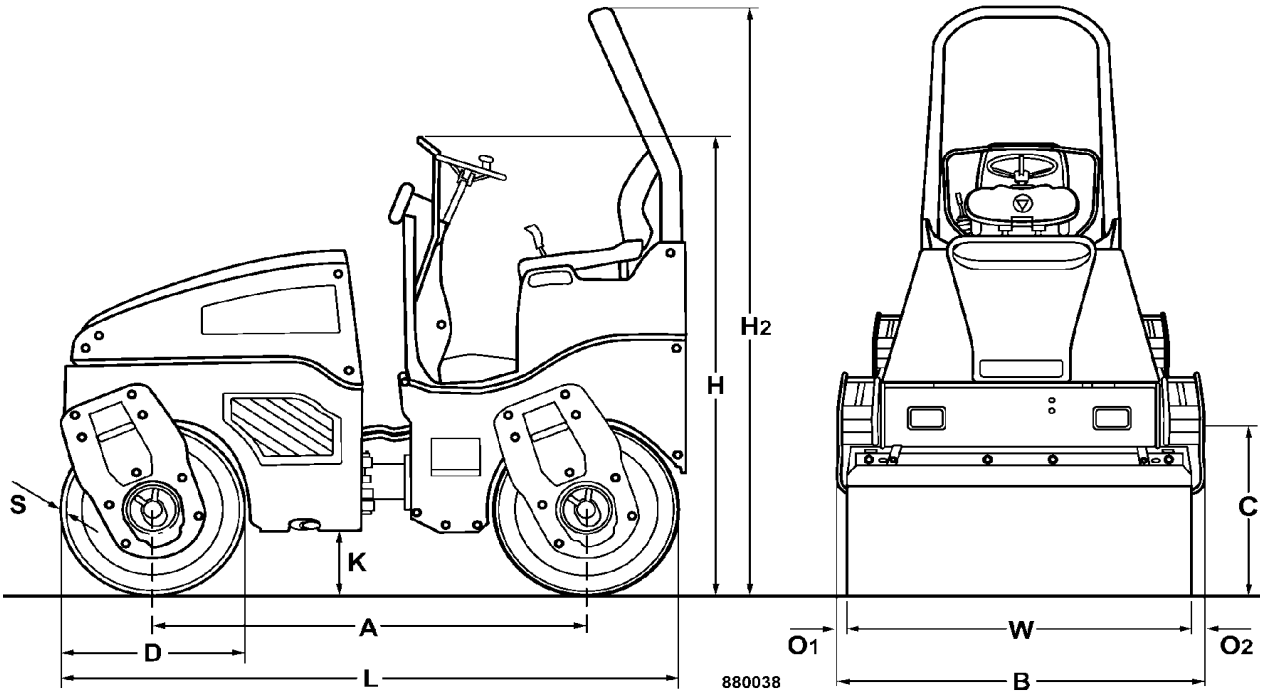

Fig. 4

Dimensions in mm	A	B	C	D	H	H2	K	L	O	S	W
BW 100 AD-4	1728	1076	475	700	1800	2475	255	2475	38	13	1000
BW 120 AD-4	1728	1276	474	700	1800	2475	255	2475	38	13	1200
BW 125 AD-4	1728	1276	474	700	1800	2475	255	2475	38	23	1200

1		**BW 100 AD-4**	**BW 120 AD-4**	**BW 125 AD-4**
Weights				
Operating weight with ROPS (CECE)	kg	2400	2600	3150
Operating weight with ROPS (CECE) and empty chip spreader[2]	kg	2520	2730	3150
Mean axle load (CECE)	kg	1200	1300	1575
Mean static linear load (CECE)	kg/cm	12.0	10.8	13.1
Max. operating weight	kg	2950	3150	3400
Dimensions				
Inner track radius	mm	2720	2620	2620
Length with chip spreader**	mm	3250	3250	-
Width with chip spreader**	mm	1180	1276	-

Technical Data

1		BW 100 AD-4	BW 120 AD-4	BW 125 AD-4
Travel characteristics				
Working speed with vibration	km/h	0 – 6.5	0 – 6.5	0 – 6.5
Travel speed	km/h	0 – 12	0 – 12	0 – 12
Max. gradability without/with vibration (soil dependent)	%	40/30	40/30	40/30
Drive				
Engine manufacturer		Kubota	Kubota	Kubota
Type		D 1703-M-EU34	D 1703-M-EU34	D 1703-M-EU34
Cooling		Water	Water	Water
Number of cylinders		3	3	3
Rated power ISO 9249	kW	24.3	24.3	24.3
Rated power SAE J 1349	hp	32.6	32.6	32.6
Rated speed	min^{-1}	2600	2600	2600
Fixed engine speed 1	min^{-1}	2400	2400	2400
Fixed engine speed 2	min^{-1}	2600	2600	2600
Electrical equipment	V	12	12	12
Brake				
Service brake		hydrost.	hydrost.	hydrost.
Parking brake		hydro-mech.	hydro-mech.	hydro-mech.
Steering				
Type of steering		Oscill.-articul.	Oscill.-articul.	Oscill.-articul.
Steering operation		hydrost.	hydrost.	hydrost.
Steering/oscillation angle	+/- °	30/7	30/7	30/7
Exciter system				
Vibrating drum		front + rear	front + rear	front + rear
Drive system		hydrost.	hydrost.	hydrost.
Frequency 1/2	Hz	70/55	70/55	60/50
Amplitude	mm	0.50	0.51	0.40
Centrifugal force 1/2	kN	37/23	45/28	41/29
Water sprinkler system				
Type		Gravity feed	Gravity feed	Gravity feed
Filling capacities				
Fuel (diesel)	l	approx. 40	approx. 40	approx. 40
Water tank capacity	l	approx. 220	approx. 220	approx. 220
Hydraulic oil	l	approx. 28	approx. 32	approx. 32
Engine oil	l	approx. 6,5	approx. 6,5	approx. 6,5

1 The right for technical modifications remains reserved
2 Optional equipment

Technical Data

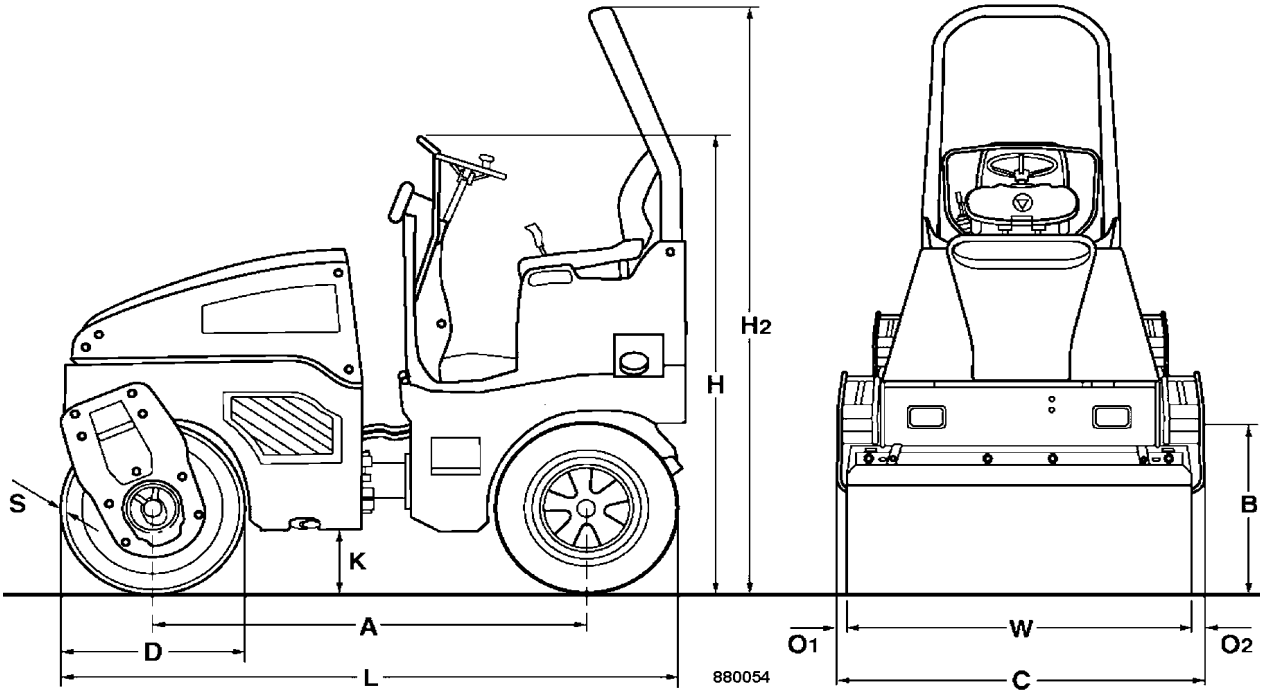

Fig. 5

Dimensions in mm	A	B	C	D	H	H2	K	L	O	S	W
BW 100 AC-4	1728	1076	475	700	1800	2475	255	2475	38	13	1000
BW 120 AC-4	1728	1276	474	700	1800	2475	255	2475	38	13	1200
BW 125 AC-4	1728	1276	474	700	1800	2475	255	2475	38	23	1200

1		**BW 100 AC-4**	**BW 120 AC-4**	**BW 125 AC-4**
Weights				
Operating weight with ROPS (CECE)	kg	2250	2400	2950
Axle load, drum (CECE)	kg	1150	1240	1600
Axle load, wheels (CECE)	kg	1100	1160	1350
Static linear load (CECE)	kg/cm	11.5	10.3	13.5
Wheel load (CECE)	kg	275	290	338
Max. operating weight	kg	2600	2800	3250
Dimensions				
Inner track radius	mm	2720	2620	2620

Technical Data

1		BW 100 AC-4	BW 120 AC-4	BW 125 AC-4
Travel characteristics				
Working speed with vibration	km/h	0 – 6	0 – 6	0 – 6
Travel speed	km/h	0 – 10	0 – 10	0 – 10
Max. gradability without/with vibration (soil dependent)	%	40/30	40/30	40/30
Drive				
Engine manufacturer		Kubota	Kubota	Kubota
Type		D 1703-M-EU34	D 1703-M-EU34	D 1703-M-EU34
Cooling		Water	Water	Water
Number of cylinders		3	3	3
Rated power ISO 9249	kW	24.3	24.3	24.3
Rated power SAE J 1349	hp	32.6	32.6	32.6
Rotary speed (nominal speed)	rpm	2600	2600	2600
Fixed engine speed 1	rpm	2400	2400	2400
Fixed engine speed 2	rpm	2600	2600	2600
Electrical equipment	V	12	12	12
Tires				
Number of tires		4	4	4
Tire size		205/60-15	205/60-15	205/60-15
Brake				
Service brake		hydrost.	hydrost.	hydrost.
Parking brake		hydro-mech.	hydro-mech.	hydro-mech.
Steering				
Type of steering		Oscill.-articul.	Oscill.-articul.	Oscill.-articul.
Steering operation		hydrost.	hydrost.	hydrost.
Steering/oscillation angle	degree	30/7	30/7	30/7
Exciter system				
Vibrating drum		front	front	front
Drive system		hydrost.	hydrost.	hydrost.
Frequency 1/2	Hz	70/55	70/55	60/50
Amplitude	mm	0.50	0.52	0.40
Centrifugal force 1/2	kN	37/23	45/28	42/29
Water sprinkler system				
Type		Pressure	Pressure	Pressure
Interval control		Standard	Standard	Standard
Filling capacities				
Fuel (diesel)	l	approx. 40	approx. 40	approx. 40
Water tank capacity	l	approx. 220	approx. 220	approx. 220
Emulsion	l	approx. 20	approx. 20	approx. 20
Hydraulic oil	l	approx. 28	approx. 28	approx. 28
Engine oil	l	approx. 6,5	approx. 6,5	approx. 6,5

Technical Data

1 Subject to technical alterations.

The following noise and vibration data acc. to

- EC Machine Regulation edition 2006/42/EC

- the noise regulation 2000/14/EG, noise protection guideline 2003/10/EC

- Vibration Protection Regulation 2002/44/EC

were determined during conditions typical for this type of equipment and by application of harmonized standards.

During operation these values may vary because of the existing operating conditions.

Noise value

Sound pressure level on the place of the operator:

L_{pA} = 84 dB(A), determined acc. to ISO 11204 and EN 500

Guaranteed sound power level:

L_{WA} = 106 dB(A), determined acc. to ISO 3744 and EN 500

⚠ Danger

Wear your personal noise protection means (ear defenders) before starting operation.

Vibration value

Vibration of the entire body (driver's seat)

The weighted effective acceleration value determined according to ISO 7096 is ≤ 0.5 m/s^2.

Hand-arm vibration values

The weighted effective acceleration value determined according to ISO 5349 is ≤ 2.5 m/s^2.

Technical Data

3 Safety regulations

Safety regulations

General

This BOMAG machine has been built in compliance with the latest technical standard and complies with the applicable regulations and technical rules. However, dangers for persons and property may arise from this machine, if:

- it is used for purposes other than the ones it is intended for,
- it is operated by untrained personnel,
- it is changed or converted in an unprofessional way,
- the safety instructions are not observed.

Each person involved in the operation, maintenance and repair of the machine must therefore read and comply with these safety regulations. If necessary, this must be confirmed by obtaining the signature of the customer.

Furthermore, the following obviously also applies:

- applicable accident prevention instructions,
- generally accepted safety and road traffic regulations,
- country specific safety regulations. It is the duty of the operator to be acquainted with these instructions and to apply these accordingly. This applies also for local regulations concerning different types of handling work. Should the recommendations in these instructions be different from the regulations valid in your country, you must comply with the safety regulations valid in your country.

Intended use

This machine must only be used for:

- Compaction of bituminous material, e.g. road surface layers.
- light compaction work in earth construction (road sub-bases).

Unintended use

Dangers may arise from the machine when it is used for purposes other than the one it is intended for.

Any danger caused by intended use is the sole responsibility of the customer or driver/operator, the manufacturer cannot be made liable.

Examples for unintended use are:

- work with vibration on hard concrete, cured bitumen layers or extremely frozen ground
- cleaning the drums while driving or changing nozzles during travel.
- driving on unstable subbases or insufficient grip or too small contact area (danger of tipping over)
- Passing over high borders (e.g. curbstones, embankments, trenches, potholes)
- unauthorized use of public roads
- Using the machine for towing

Transporting persons, except the machine driver, is prohibited.

Starting and operation of the machine in explosive environments and in underground mining is prohibited.

Remaining dangers, remaining risks

Despite careful work and compliance with standards and regulations it cannot be ruled out that further dangers may arise when working with and handling the machine.

Both the machine as well as all other system components comply with the currently valid safety regulations. Nevertheless, remaining risks cannot be ruled out completely, even when using the machine for the purpose it is intended for and following all information given in the operating instructions.

A remaining risk can also not be excluded beyond the actual danger zone of the machine. Persons remaining in this area must pay particular attention to the machine, so that they can react immediately in case of a possible malfunction, an incident or failure etc.

All persons remaining ion the area of the machine must be informed about the dangers that arise from the operation of the machine.

Regular safety inspections

Have the machine inspected by an expert (capable person) as required for the conditiosn the machine is working under, but at least once every year.

Who is allowed to operate the machine?

Only trained, instructed and authorized persons of at least 18 years of age are permitted to drive and operate this machine. For operation of the machine the responsibilities must be clearly specified and complied with.

Persons under the influence of alcohol, medicine or drugs are not allowed to operate, service or repair the machine.

Maintenance and repair work requires specific knowledge and must therefore only be performed by trained specialists.

Changes and conversions to the machine

Unauthorized changes to the machine are prohibited for safety reasons.

Original parts and accessories have been specially designed for this machine.

We wish to make explicitly clear that we have not tested or approved any parts or accessories not supplied by us.

The installation and/or use of such products may have an adverse effect on the active and/or passive safety.

The manufacturer explicitly excludes any liability for damage caused by the use of non-original parts or accessories.

Damage, deficiencies, misuse of safety installations

Machines which are not safe to operate or in traffic must be immediately taken out of service and shall not be used, until these deficiencies have been properly rectified.

Safety installations and switches must neither be removed nor must they be made ineffective.

Notes on safety in the operating and maintenance instructions

⚠ Danger

Paragraphs marked like this highlight possible dangers for persons.

⚠ Caution

Paragraphs marked like this highlight possible dangers for machines or parts of the machine.

i Note

Paragraphs marked like this contain technical information for the optimal economical use of the machine.

Environment

Paragraphs marked like this point out practices for safe and environmental disposal of fuels and lubricants as well as replacement parts.

Observe the regulations for the protection of the environment.

Loading/transporting the machine

Loading with loading ramp

Use only stable loading ramps of sufficient load bearing capacity. The ramp inclination must be less than the gradability of the machine.

Make sure that persons are not endangered by the machine tipping or sliding off.

During demonstration and when loading the machine do not remain in the danger zone of the machine.

Always empty the chip spreader [1] before transport.

After driving the machine onto the transport vehicle attach the articulation lock .

Loading by crane / loading the machine with a lifting belt[2]

With the chip spreader attached the machine must not be lifted with lifting belts, because of the changed centre of gravity.

Engage the articulation lock.

Always use shackles on the lifting points or on the lifting belt for loading the machine.

Check all lifting points and lifting belt for damage before lifting the machine. Damaged or in any other way in their functionality impaired lifting points or a damaged or in its functionality impaired lifting belt must not be used.

1 Optional equipment
2 Optional equipment

Lifting tackle must only be attached to loads by expert personnel (qualified person).

Do not overload the lifting belt.

Lift the machine only with suitable lifting gear. Use only safe lifting gear of sufficient load bearing capacity Minimum lifting capacity of lifting gear: see operating weight in chapter "Technical Data".

Do not lift or lower the machine jerkily.

The tension must always be effective in vertical direction.

The machine must not swing about when being lifted.

Do not step or stand under suspended loads.

After lifting hook the lifting belt back into its receptacle.

Have the lifting tackle inspected by an expert (properly trained person) once every year.

After 5 years replace the lifting belt with a new one.

Always empty the chip spreader [1] before transport.

Lashing

Always use shackles on the lifting points for lashing down the machine.

Check all lashing points for damage before lashing down the machine. Do not use a damaged or in any other way impaired lashing points.

Lash the machine down, so that it is secured against rolling, sliding and turning over.

Never attach the lashing gear to the chip spreader.

After transport

Operate the machine only with the foldable ROPS[2] properly fastened and the fastening screws tightened with the correct tightening torque.

After transport release the articulation lock again and store it in the receptacle.

Towing the machine

You should generally use a tow bar.

With the chip spreader[3] attached the machine must not be towed backwards.

1 Optional equipment
2 Optional equipment
3 Optional equipment

Max. towing speed 1 km/h, max. towing distance 500 m.

Before releasing the multi-disc brake secure the machine against unintended rolling.

Checking the Roll Over Protective Structure (ROPS)

i Note

On machines with cab the ROPS is an integral part of the cab.

The frame of the machine must not be warped, bent or cracked in the area of the ROPS fastening.

The ROPS must not show any rust, damage, hairline cracks or open fractures.

The actual weight of the machine must not exceed the testing weight of the ROPS.

The ROPS must not rattle about when driving. This indicates that it is not properly fastened. All bolted connections must comply with the specifications and should be absolutely tight (observe the tightening torques). Screw and nuts must not be damaged, bent or deformed.

With the cab assembled check also the state of the cabin mounts (rubber elements and screws).

No accessories may be welded or bolted on and no additional holes must be drilled without the consent of the manufacturer, since this will impair the strength of the unit.

The ROPS must therefore also not be straightened or repaired if it is damaged.

A defect ROPS must generally be replaced with an original spare part in close coordination with the manufacturer.

Starting the machine

Before starting

The machine must only be operated from the driver's seat.

Use only machines which are serviced at regular intervals.

Become acquainted with the equipment, the control elements, the working principle of the machine and the working area.

Wear your personal protective outfit (hard hat, safety boots, etc.). Wear ear defenders.

Before mounting the machine check whether:

- persons or obstructions are beside or under the machine
- the machine is free of oily and combustible material
- all grips, steps and platforms are free of grease, oils, fuel, dirt, snow and ice
- engine hood is closed and locked

Use steps and grips to mount the machine.

Before starting the machine check whether:

- the machine shows any obvious faults
- all guards and safety elements are in place
- steering, brakes, control elements, light system and warning horn work correctly
- the seat is correctly adjusted
- mirrors (if present) are clean and correctly adjusted.

Do not start the machine with defective gauges, control lights or control elements.

Do not take any loose objects with you or fasten them to the machine.

On machines with roll over protection system you must always wear your seat belt!

Starting

Start and operate the machine only from the driver's seat.

For starting set all control levers to 'neutral position'.

Do not use any starting aids like start pilot or ether.

After starting check all gauges and control lights.

Starting with jump wires

Connect plus to plus and minus to minus (ground cable) – always connect the ground strap last and disconnect it first! A wrong connection will cause severe damage in the electric system.

Do not start the engine by shorting the electric terminals on the starter motor, because the machine may start to drive immediately.

Starting and operation of the machine is closed rooms and trenches

Exhaust gases are highly dangerous! Always ensure an adequate supply of fresh air when starting and operating in closed rooms and trenches!

Driving the machine

Persons in the danger area

Before taking up work, also after breaks, you should always convince yourself that the danger zone is free of persons or obstructions, especially when driving in reverse.

Give warning signals, if necessary. Stop work immediately if persons remain in the danger zone, despite the warning.

Do not step or stand in the articulation area of the machine when the engine is running. Danger of squashing!

Driving

Always wear the seat belt when driving.

Do not drive on bases with insufficient load bearing capacity.

Do not drive on ice and snow.

In events of emergency and in case of danger actuate the emergency stop switch immediately. Do not use the emergency stop switch as service brake.

Restart the machine only after the danger that caused the actuation of the emergency stop switch has been eliminated.

If the engine oil pressure control light lights up stop the engine immediately.

If the machine has contacted high-voltage power lines:

- do not leave the operator's stand
- warn others from coming close to or touching the machine
- if possible drive the machine out of the danger zone
- have the power switched off

Operate the machine only from the operator's stand.

Keep the cabin doors closed.

Do not adjust the driver's seat while driving.

Do not climb onto or off the machine while the machine is driving.

Change the travel direction only at standstill.

Do not use the machine to transport persons.

In case of unusual noises and development of smoke perform trouble shooting and have the fault corrected.

Always keep a sufficient distance to excavation walls and embankments and do not use working methods that could impair the stability of the machine.

Do not work with vibration on hard concrete, cured bitumen layers or extremely frozen ground.

Always keep a sufficient distance when passing through subways, under bridges, tunnels, electric power lines etc.

Driving on inclinations and slopes

Do not drive on gradients exceeding the maximum gradability of the machine.

On slopes drive extremely careful and always directly up or down the slope. Change to a lower gear before starting to drive.

Wet and loose soils considerably reduce the ground adhesion of the machine on inclinations and slopes. Higher risk of accident!

Inclination

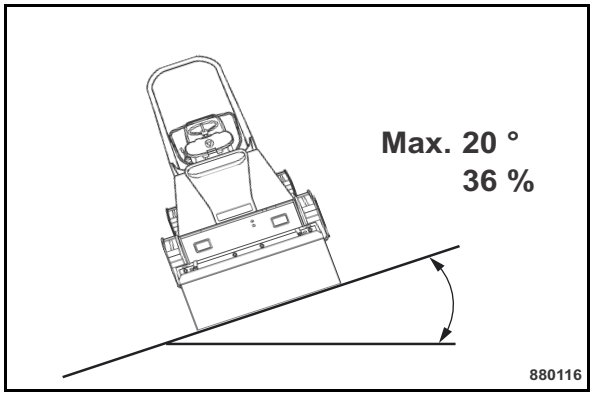

Fig. 6

The tipping angle was measured in static condition on level, hard ground with the machine stopped, no steering and without vibration.

With loose soil, acceleration/deceleration, running vibration, steering or attached accessoriies the tipping angle may be considerably lower.

Driving across slopes should therefore be strictly avoided, because of the high risk of tipping over and the related risk of severe or even fatal accidents.

You should therefore always drive straight up or down a slope.

For rollers with a drum width of 1 m or less there is a considerable risk of tipping over near edges (e.g. curbstones, embankments, trenches, potholes) when driving over these edges.

Behaviour in traffic

Match the speed to the working conditions. Do not make extreme steering movements when driving with high speed, danger of tipping over!

Always give way to loaded transport vehicles.

Switch the lights on if the visibility is poor.

Keep away from edges and embankments.

Checking the effect of vibration

When compacting with vibration you must check the effect on nearby buildings and underground supply lines (gas, water, sewage, electric power), if necessary stop compaction work with vibration.

Do not work with vibration on hard concrete, cured bitumen layers or extremely frozen ground. Danger of bearing damage!

Parking the machine

Park the machine on level, firm ground.

Before leaving the machine:

- return the control lever to neutral position
- apply the parking brake
- shut the engine down and pull off the ignition key

Do not jump off the machine, but use hand grips and access steps.

Mark machines, which could be in the way, with a clearly visible sign.

Parking on slopes and inclinations

Apply appropriate measures (e.g. with metal wheel chocks, to be provided by the operating company) tp secure the machine against rolling away.

Refuelling

Do not inhale any fuel fumes.

Refuel only with the engine stopped and the auxiliary heater switched off.

Always use access steps.

Do not refuel in closed rooms.

No open fire, do not smoke.

Do not spill any fuel. Catch running out fuel, do not let it seep into the ground.

Wipe off spilled fuel. Keep dirt and water away from the fuel.

A leaking fuel tank can cause an explosion. Ensure tight fit of the fuel tank cover, if necessary replace immediately.

Fire protection measures

Familiarise yourself with the location and the operation of fire fighting equipment. Observe all fire reporting and fire fighting possibilities.

Mounting and removing the chip spreader[1]

When mounting or removing the chip spreader do not step between the chip spreader and the machine while the engine is running.

Park the machine on a level and solid base to mount or remove the chip spreader and shut down the engine.

Mount and remove the chip spreader when it is empty.

Maintenance

Observe the maintenance tasks described in the operating and maintenance instructions, including the exchange of parts.

Maintenance work must only be carried out by qualified and authorized personnel.

For overhead service and assembly work use the provided access installations or any other safe access ladders and work platforms. Do not use machine parts as access steps.

Keep unauthorized persons away from the machine.

Do not perform maintenance work with the machine driving or the engine running.

Park the machine on horizontal, level and stable ground.

Pull the key out of the ignition switch.

Lock the articulated joint with the articulation lock.

1 Optional equipment

Working on hydraulic lines

Always depressurize the hydraulic lines before starting to work on them. Hydraulic oil escaping under pressure can penetrate the skin and cause severe injury. If injured by hydraulic oil seek medical advice immediately as otherwise severe infections may result.

When adjusting the hydraulic system do not stand behind or in front of the drum/wheels.

Do not change the setting of high pressure relief valves.

Drain hydraulic oil at operating temperature - danger of scalding!

Catch running out hydraulic oil and dispose of environmentally.

Always catch and dispose of biological hydraulic oils separately.

Do not start the engine after draining off the hydraulic oil.

After finishing work (with the system still depressurized!) check all connections and fittings for leaks.

Changing hydraulic hoses

All hydraulic hoses must be inspected visually at regular intervals.

Hydraulic hoses must be changed immediately if:

- the outer layer is worn down to the metal lining (e.g. chafing, cuts, cracks)
- embrittlement of the outer layer (development of cracks in the hose material)
- deformation under pressurized and depressurized condition, which are not in accordance with the normal shape of the hydraulic hose
- deformation in bends, e.g., squeezes, kinks, layer separation, formation of blisters
- leakages.
- non-observance of the installation requirements.
- separation of the hydraulic hose from the fitting
- corrosion of the fitting, which impairs the function and the strength.
- Do not mix up hoses by mistake.
- damage or deformation of the fitting, which impairs the function and strength of the hose/ hose connection.

Safety regulations

Only genuine BOMAG hydraulic hoses ensure that the correct type of hose (pressure range) is used at the right place.

Working on the engine

Shut the engine down before opening the engine compartment hood.

Drain the engine oil at operating temperature - danger of scalding!

Wipe off spilled oil, catch running out oil and dispose of environmentally.

Store used filters and other oily materials in a separate, specially marked container and dispose of environmentally.

Do not leave any tools or other objects, which could cause damage, in the engine compartment.

Check and change the coolant only when the engine is cold.

Catch the coolant and dispose of environmentally.

Working on electrical equipment

Before working on electrical equipment disconnect the battery and cover it with insulating material.

Do not use any fuses with higher Ampere ratings and do not repair fuses with a piece of wire. Fire hazard!

Always disconnect the battery before starting to weld on the machine.

Working on the battery

When working on the battery do not smoke, no open flames!.

Do not let your hands or clothes come in contact with acid. In case of injuries caused by acid, flush off with clear water and consult a doctor.

Metal objects (e.g. tools, rings, wrist watches) must not contact the battery poles - danger of short circuit and burns!

When recharging maintenance free batteries remove the plugs to avoid the accumulation of explosive gases.

When using an external battery to start the machine follow the respective instructions.

Dispose of old batteries environmentally.

Switch the charging current off before removing the charge clamps.

Ensure good ventilation, especially when charging the battery in a closed room.

Working on the fuel system

Do not inhale fuel fumes.

No open fire, do not smoke, do not spill any fuel.

Catch running out fuel, do not let it seep into the ground and dispose of environmentally.

Working on wheels and tires

Explosion-like bursting of tires and parts of rims and tires can cause severe or even deadly injuries.

You should only assemble tires if you have the necessary experience and with the proper equipment. If necessary have the tires mounted by a specialised workshop.

Ensure correct tire pressure and do not exceed the highest specified pressure.

Check tires and wheels every day for pressure drop, cuts, bulges, damaged rims, missing wheel studs and nuts. Do not drive with damaged tires or wheels.

Non-sticking emulsions for tires must only be made up of a mix of water and a concentrated anti-stick agent according to the instructions of the manufacturer. Observe the regulations for the protection of the environment.

Cleaning

Do not clean the machine while the engine is running.

Do not use gasoline or other combustible substances for cleaning purposes.

When using steam cleaning equipment do not subject electrical components and insulating materials to the direct water jet, but cover them beforehand.

- Do not guide the water jet into the exhaust or into the air filter.

After maintenance work

Reinstall all protective devices after completing the maintenance work.

Repair

Mark a defective machine by attaching a warning tag to the steering wheel.

Repair work must only be performed by qualified and authorized persons. Use our repair instructions for this work.

Exhaust gases are highly dangerous! Always ensure an adequate supply of fresh air when starting in closed rooms!

Test

The safety of compaction equipment must be checked by a specialist as required in dependence on the application and the operating conditions, however at least once every year.

Information and safety stickers/decals on the machine

Keep safety stickers in good and legible condition (see parts manual) and comply with their meaning.

Replace damaged and illegible stickers/decals.

Safety regulations

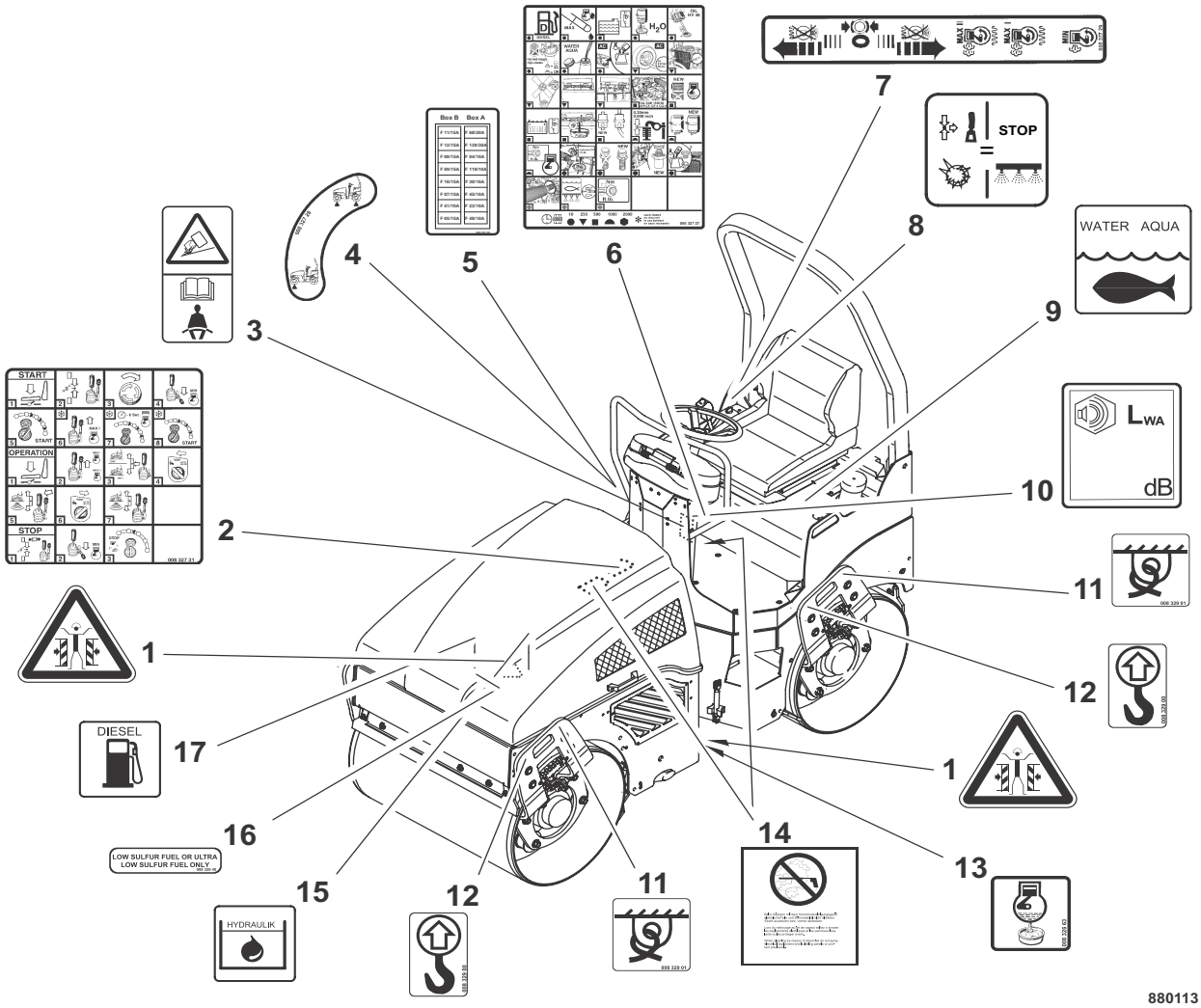

Fig. 7

Stickers and decals BW 100/120/125 AD-4

1 Warning sticker - Danger of crushing
2 Brief operating instructions
3 Warning sticker - Danger of tipping over[1]
4 Information sticker - Ball valve vibration
5 Information sticker - Allocation of fuses
6 Maintenance sticker
7 Operation sticker - Travel lever
8 Operation sticker - Water sprinkling system
9 Information sticker - Water
10 Information sticker - Guaranteed sound capacity level
11 Information sticker - Lashing point
12 Information sticker - Lifting point
13 Information sticker - Engine oil drain
14 Prohibition sticker - High pressure cleaner
15 Information sticker - Hydraulic oil
16 Information sticker - Low sulphur fuel
17 Information sticker - Diesel

1 only BW 100 AD-4

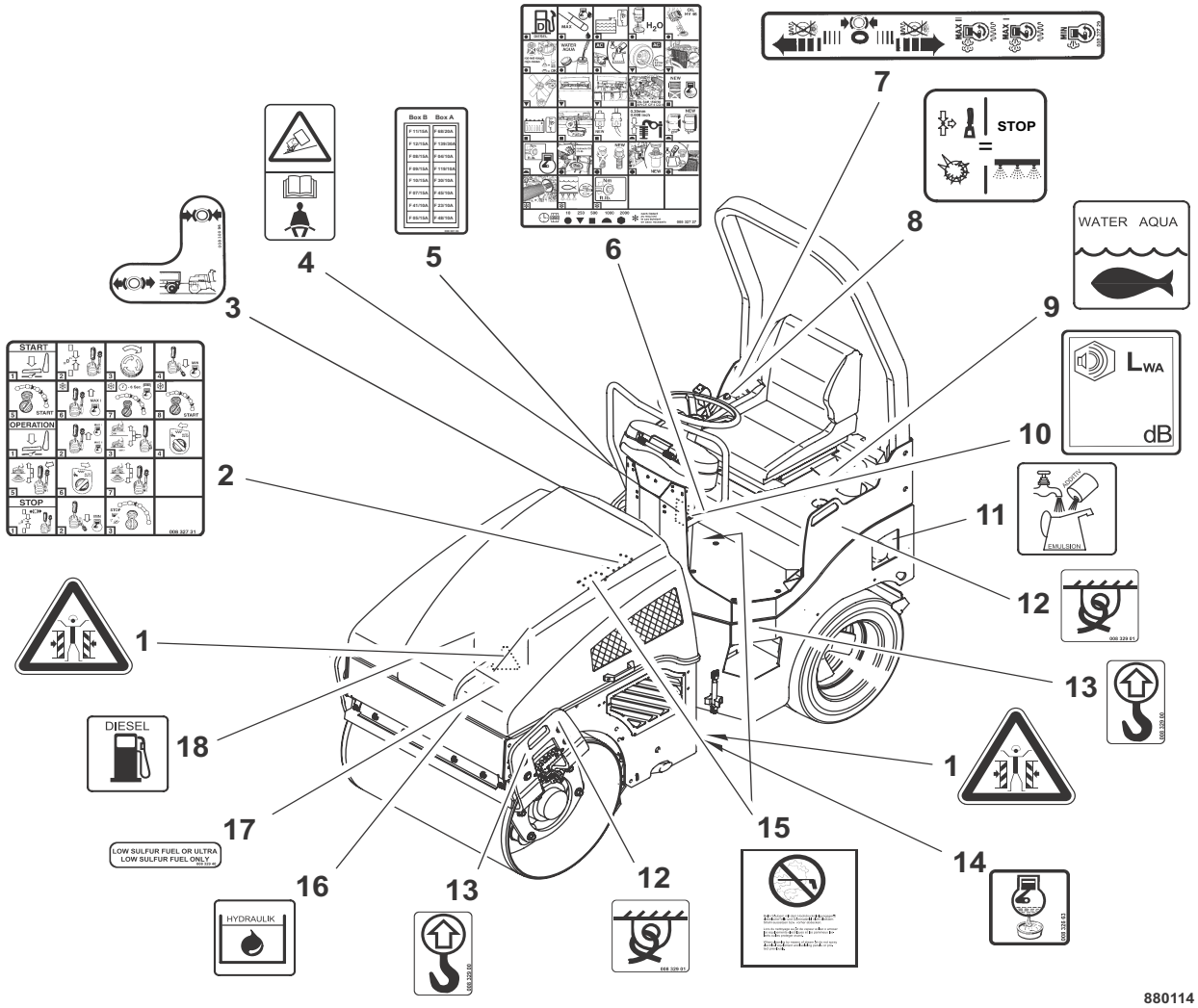

Fig. 8

Stickers and decals BW 100/120 AC-4

1 Warning sticker - Danger of crushing
2 Brief operating instructions
3 Operation sticker - Brake releasing device
4 Warning sticker - Danger of tipping over[1]
5 Information sticker - Allocation of fuses
6 Maintenance sticker
7 Operation sticker - Travel lever
8 Operation sticker - Water sprinkling system
9 Information sticker - Water
10 Information sticker - Guaranteed sound capacity level
11 Information sticker - Emulsion
12 Information sticker - Lashing point
13 Information sticker - Lifting point
14 Information sticker - Engine oil drain
15 Prohibition sticker - High pressure cleaner
16 Information sticker - Hydraulic oil
17 Information sticker - Low sulphur fuel
18 Information sticker - Diesel

1 only BW 100 AC-4

Safety regulations

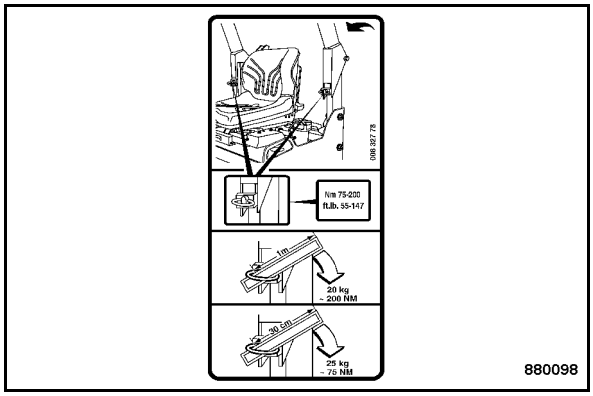

Fig. 9

Operation sticker - Foldable ROPS[1]

Fig. 10

Warning sticker - Foldable ROPS[1]

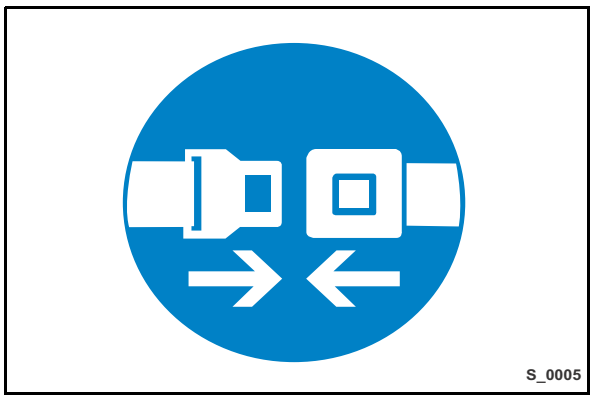

Fig. 11

Instruction sticker - Always wear your seat belt[2]

1 Optional equipment
2 Optional equipment

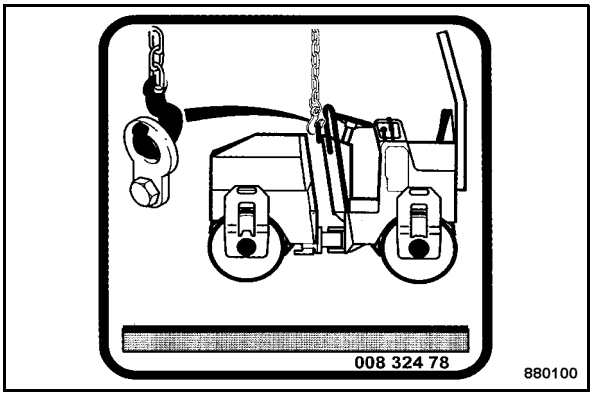

Fig. 12

Operation sticker - Central lifting device[3]

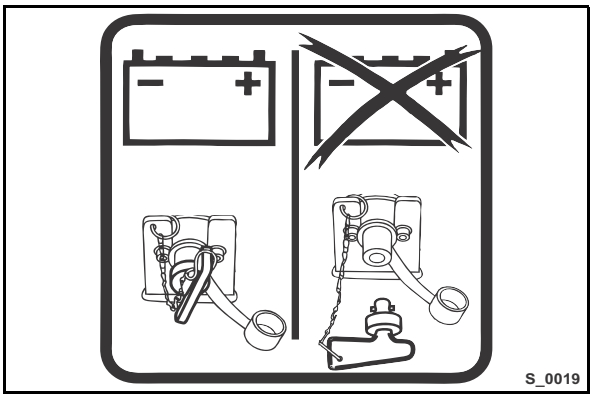

Fig. 13

Information sticker - Main battery switch[4]

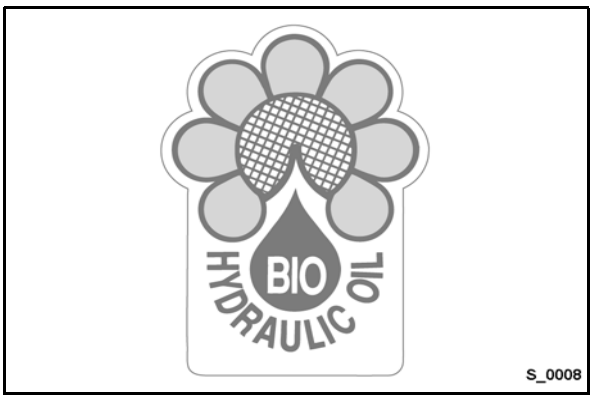

Fig. 14

Information sticker - Biodegradable hydraulic oil[5]

3 Optional equipment
4 Optional equipment
5 Optional equipment

Fig. 15

Information sticker - Panolin 46[1]

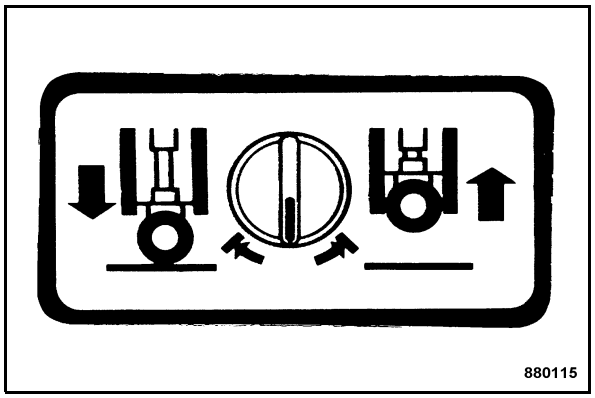

Fig. 16

Operation sticker - Edge cutter[2]

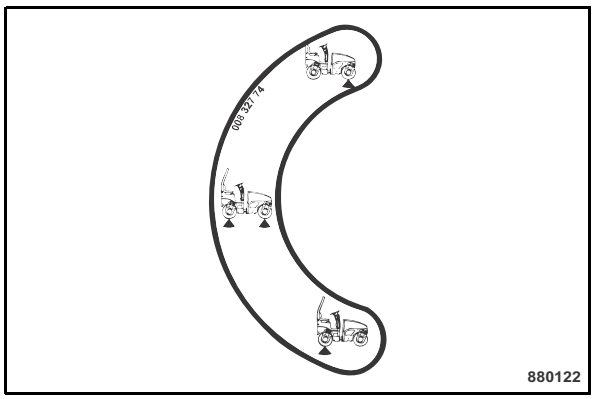

Fig. 17

Information sticker - Ball valve, vibration 3-stages[3] (only AD)

1 Optional equipment
2 Optional equipment
3 Optional equipment

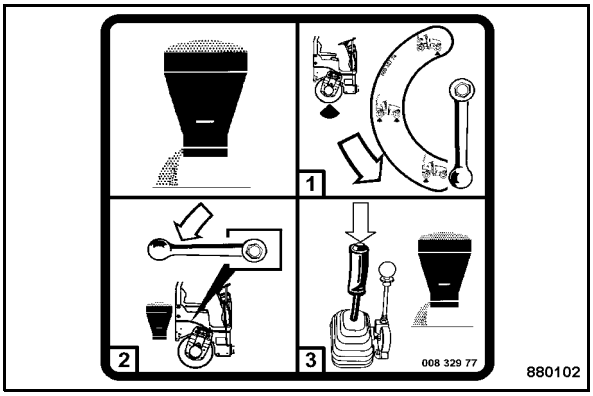

Fig. 18

Operation sticker "Chip spreader"[4]

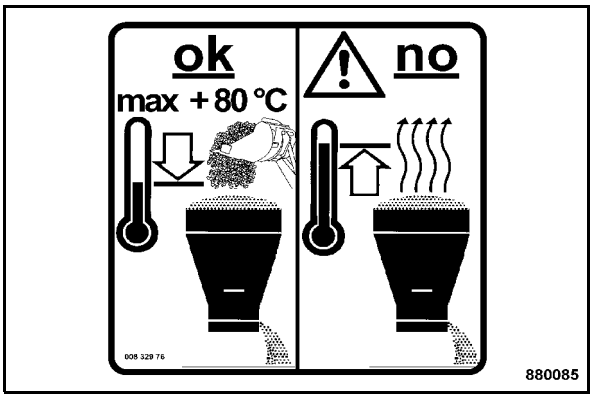

Fig. 19

Warning sticker "Chipping temperature"[5]

4 Optional equipment
5 Optional equipment

Safety regulations

4 Indicators and Controls

Indicators and Controls

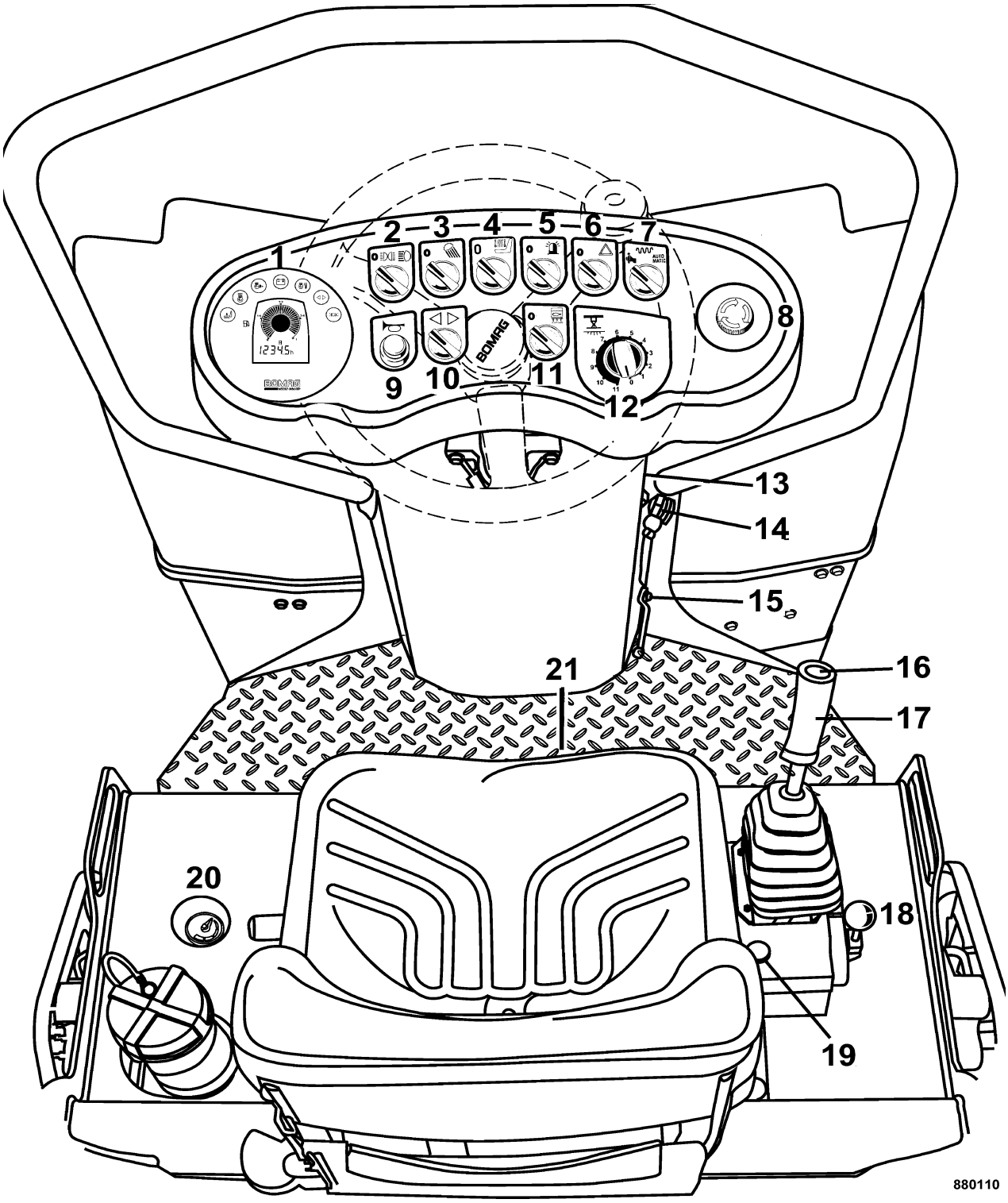

Fig. 20

1 Instrument cluster
2 Rotary switch for lighting[1]
3 Rotary switch for working lights[1]
4 Rotary switch for seat heating[1]
5 Rotary switch for flashing beacon[1]
6 Rotary switch for hazard light system[1]
7 Rotary switch for vibration, manual or automatic[1]
8 Emergency stop push button
9 Push button for warning horn
10 Rotary switch for direction indicators[1]
11 Rotary switch for gravity feed sprinkling system
12 Interval switch for pressure sprinkling system[1]
13 Fuse box
14 Start switch
15 Ball valve, vibration (only AD)
16 Push button for manual vibration
17 Travel lever
18 Throttle lever
19 Rotary switch for edge cutter[1]
20 Water level gauge
21 Foot switch for rubber tire sprinkling system (only AC) or foot switch for flow divider (only AD)[1]

1 Optional equipment

4.1 General notes

If you are not yet familiar with the control and display elements on this machine you should read this section thoroughly before starting any operation on the machine. Here all functions are described in detail.

The section "Operation" contains only brief descriptions of the individual control steps.

4.2 Description of indicators and control elements

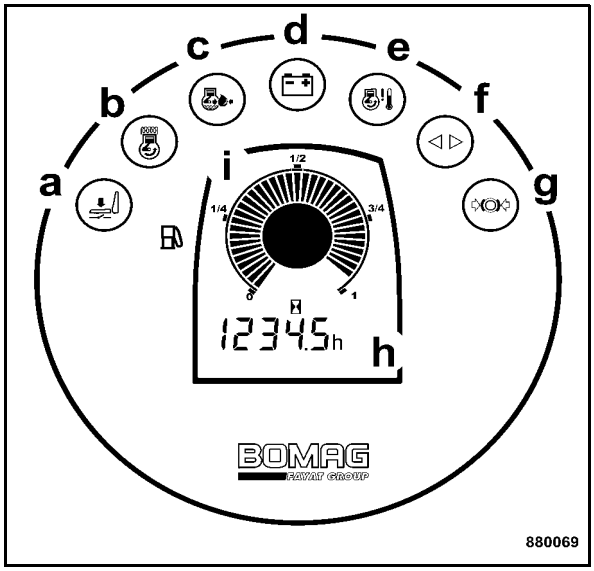

Fig. 21

No. 1 = Instrument cluster

i Note

With the ignition switch in position "I" all gauges and instruments are switched on for a moment.

a yellow = Warning light for seat contact monitoring while machine is travelling warning buzzer sounds, engine is shut down after 4 seconds.

= Warning light for seat contact monitoring with machine at rest engine is shut down when travel lever is moved out of "0"-position.

b yellow = Preheating control light
Lights in ignition switch position "II"
Preheating for starting at low temperatures

c red = Engine oil pressure warning light flashes when the engine oil pressure is too low, the warning buzzer sounds, the engine is shut down after 10 seconds.

Check engine oil level, repair the engine if necessary.

d yellow = Charge control lamp
Lights if the battery is not being charged.
Check the V-belt, if necessary repair the generator.

e red = Engine temperature warning light
Flashes when the engine overheats (110°C), the warning buzzer sounds. Switch off vibration, run engine with idle speed or shut down engine if necessary, clean engine oil cooler and radiator, if necessary repair engine.

f green = Indicator control light

g red = Parking brake warning light
Lights when the parking brake is applied

h = Operating hour meter
Counts the operating hours while the engine is running.
Maintenance work is to be carried out in accordance with the indicated operating hours.

i = Fuel level gauge

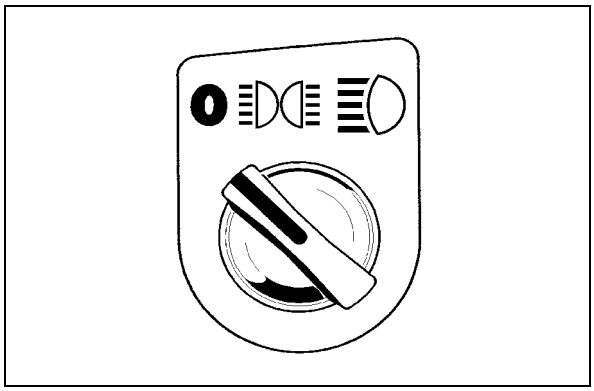

Fig. 22

No. 2 = Rotary switch for lighting[1]

Position "left" = Light off

Position "middle" = Side light on, with ignition switch in position "I"

Position "right" = Travel light on, with ignition switch in position "I".

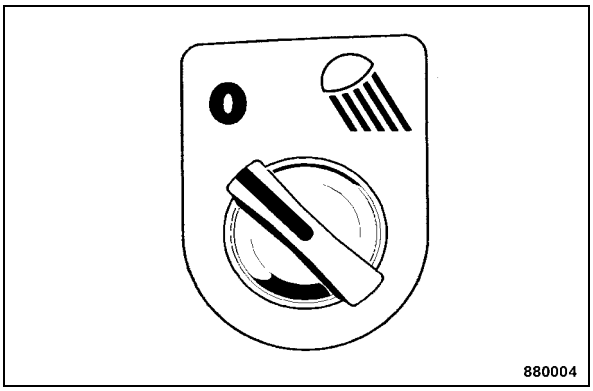

Fig. 23

No. 3 = Rotary switch for working light[2]

Position "left" = Working light off

Position "right" = Working light on, with ignition switch in position "I"

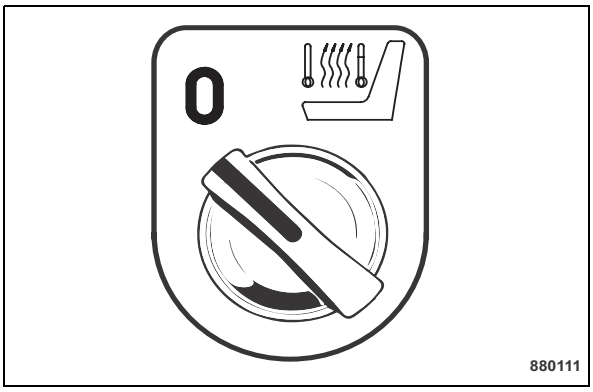

Fig. 24

No. 4 = Rotary switch for seat heating[3]

Position Left = Seat heating off

Position Right = Seat heating on

1 Optional equipment

2 Optional equipment
3 Optional equipment

Indicators and Controls

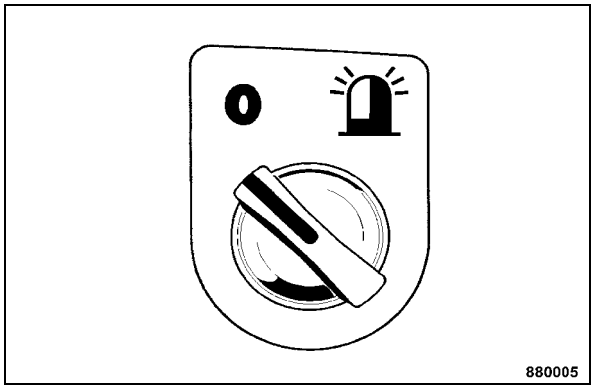

Fig. 25

No. 5 = Rotary switch for flashing beacon[1]

Position "left" = Flashing beacon off

Position "right" = Flashing beacon on

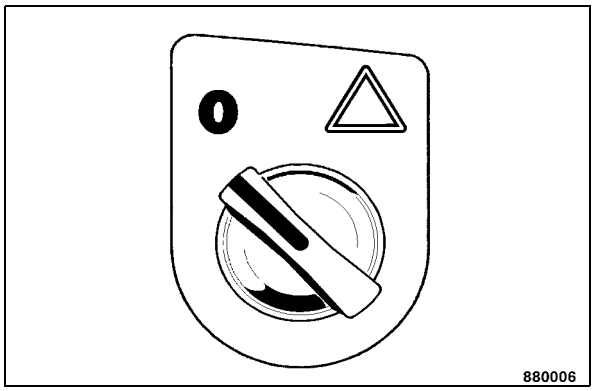

Fig. 26

No. 6 = Rotary switch for hazard light system[2]

Position "left" = Hazard light system switched off

Position "right" = Hazard light system switched on. Warning lights in switch and indicator control light in the instrument cluster start flashing.

1 Optional equipment
2 Optional equipment

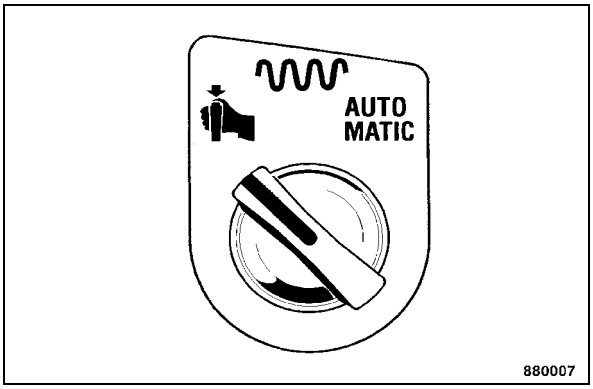

Fig. 27

No. 7 = Rotary switch for vibration, manual or automatic[3]

Position "left" = Pre-selection for vibration activation during travel via the vibration push button in the travel lever

Position "right" = Pre-selection for automatic activation and deactivation of vibration when exceeding or falling below a certain slow travel speed.

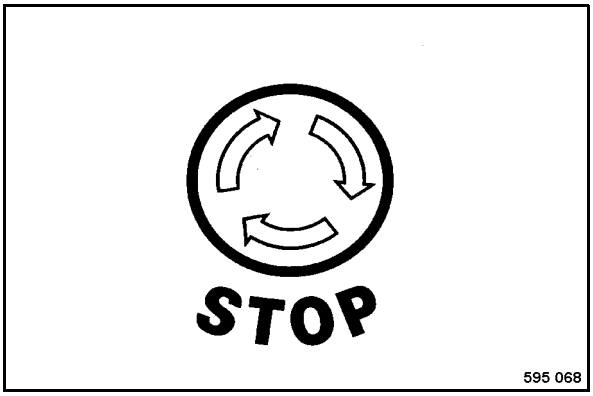

Fig. 28

No. 8 = Emergency stop push button

3 Optional equipment

⚠ Danger

Danger of accident!

Use only in events of emergency during operation.

Do not use as parking brake.

Restart the machine only after the danger that caused the actuation of the emergency stop switch has been eliminated.

The machine is braked immediately, the engine is shut down.

actuate = press the button completely down, it automatically locks in fully pressed position.

switch off/unlock = Turn button clockwise. Restart the engine.

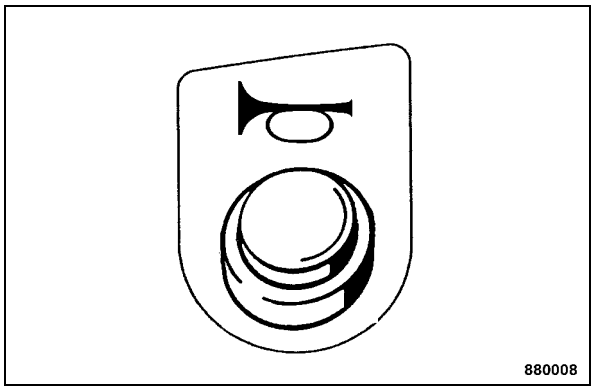

Fig. 29

No. 9 = Push button for warning horn

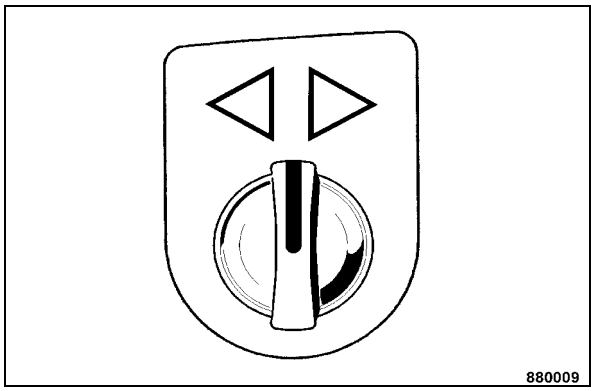

Fig. 30

No. 10 = Rotary switch for direction indicators[1]

Position "middle" = Direction indicators disabled.

Position "left or right" = Front and rear direction indicators on the corresponding side are flashing. Indicator control light in instrument cluster flashes.

i Note

If the cable to the chip spreader is plugged in, the green control light in the rotary switch will also flash as a function control. If the control light does not flash, one of the indicators on the vehicle or on the chip spreader is defective.

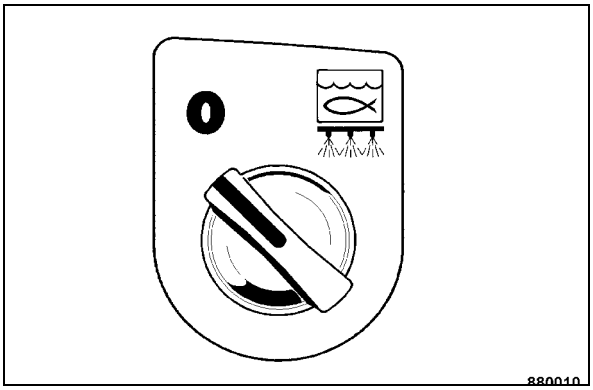

Fig. 31

No. 11 = Rotary switch for gravity feed sprinkling system

Position "left" = Gravity sprinkling system switched off

Position "right" = Gravity sprinkling system switched on

1 Optional equipment

Indicators and Controls

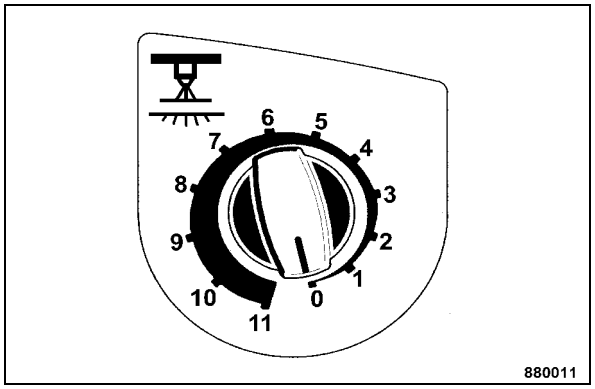

Fig. 32

No. 12 = Interval switch for pressure sprinkler system

Position 0	=	Interval and pressure sprinkling system switched off.
Position 11	=	Permanent sprinkling and function test.
further positions	=	various sprinkling intervals.

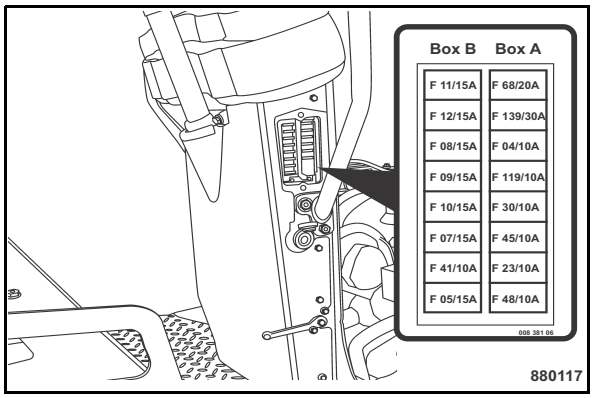

Fig. 33

No. 13 = Fuses

⚠ Danger

Fire hazard!

Do not use fuses with higher ampere ratings and do not repair fuses with a piece of wire.

Fuse box A

(1) 20A = (F68) Potential 30

(2) 30A = (F139) Engine solenoid

(3) 10A = (F04) Gauges

(4) 10A = (F119) Engine

(5) 10A = (F30) Seat heating[1]

(6) 10A = (F45) Edge cutter[1]

(7) 10A = (F23) Warning horn

(8) 10A = (F48) pre-heating system

Fuse box B

(1) 15A = (F11) Head lights, left[1]

(2) 15A = (F12) head lights, right[1]

(3) 15A = (F08) Direction indicators[1] and working head lights

(4) 15A = (F09) Parking and tail light, left[1]

(5) 15A = (F10) Parking and tail light, right[1]

(6) 15A = (F07) Hazard light[1]

(7) 10A = (F41) Flashing beacon[1]

(8) 15A = (F05) Socket[1]

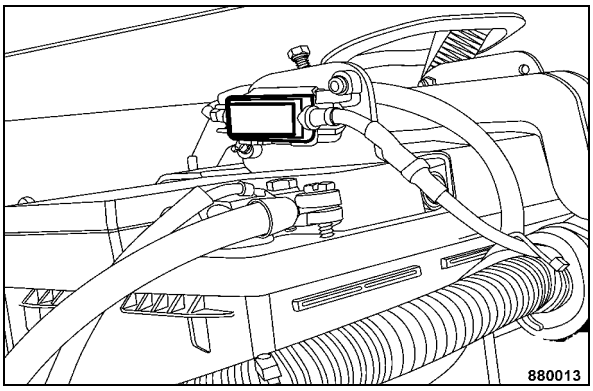

Fig. 34

Main fuse for battery

80A = F 00

1 Optional equipment

duma rent www.duma-rent.com

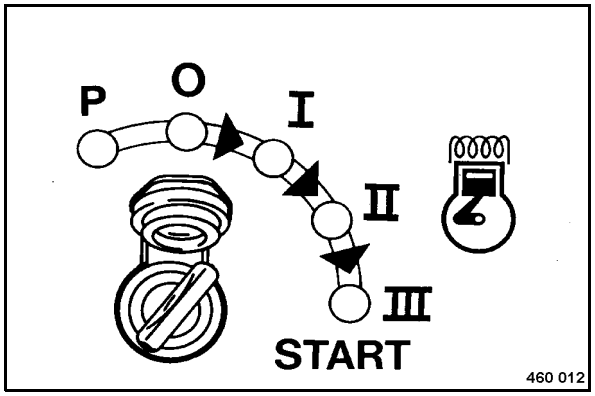

Fig. 35

No. 14 = Start switch

Position "P"/"0" = Ignition off, key can be pulled out

Position "I" = Ignition on, all warning and control lights in the instrument cluster light up for a moment *test function(, the lighting szstem can be switched on.

Position "II" = Pre-heating position, at temperatures below +10 °C, hold the ignition key in position "II" for up to 30 seconds, the pre-heating control light in the instrument cluster lights.

i Note

The engine can only be started if the travel lever is in braking position and the emergency stop switch is unlocked.

The starter switch is designed with a re-start lock. For a new starting attempt the ignition key must first be turned back to position "0".

Position "III" = Turn further against spring pressure, the engine starts, turn the ignition key back to position "I" once the engine has started.

⚠ Caution

Run the engine warm for a short while before starting work. Do not rev up a cold engine to high idle speed/full load speed.

Do not shut down the engine all of a sudden from full load speed, but let it idle for about 2 minutes.

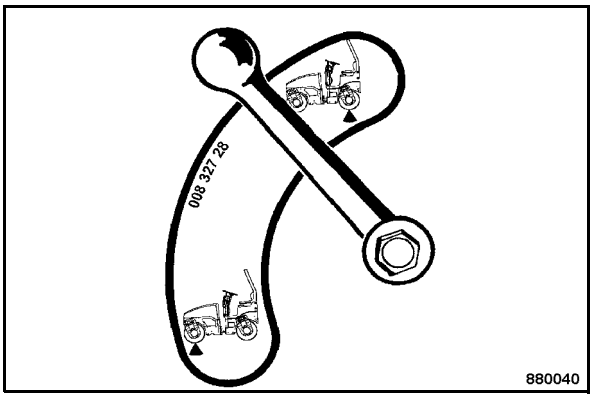

Fig. 36

No. 15 = Ball valve, vibration (only AD)

Position upward = Vibration of both drums

Position downward = Vibration of front drum only

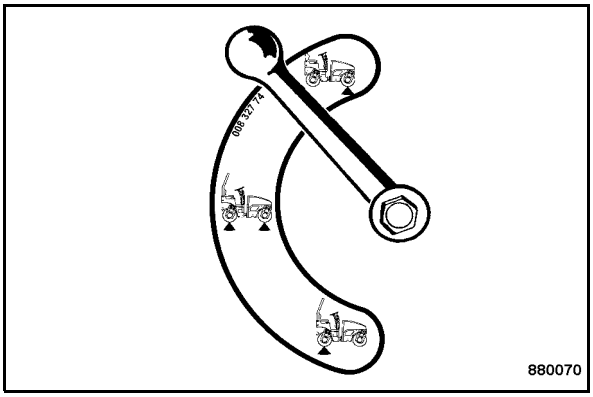

Fig. 37

Ball valve, vibration 3-stages[1] (only AD)

Position upward = Vibration of front drum only

Position horizontal = Vibration of both drums

1 Optional equipment

Indicators and Controls

Position downward = Vibration of rear drum only

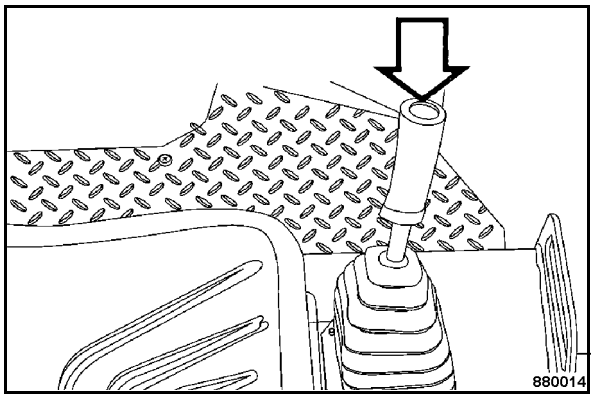

Fig. 38

No. 16 = Push button vibration

press = to switch the vibration on and off.

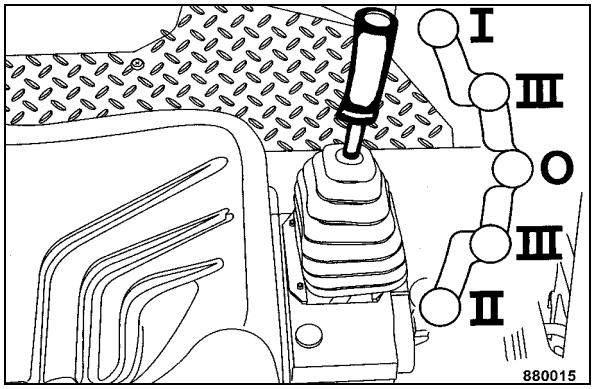

Fig. 39

No. 17 = Travel lever

Position "0" = Neutral position for engine start, brake closed.

Position "I" = Forward travel without vibration

Position "II" = Reverse travel without vibration

Position "III" = Max. forward/reverse travel with vibration

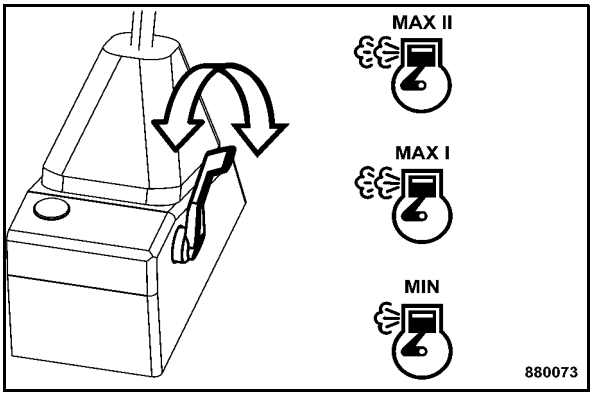

Fig. 40

No. 18 = Throttle lever

Position "MAX II" = Full load position 2500 rpm, operating position for driving and vibration.

Position "MAX I" = Full load position 2400 rpm, operating position for driving and vibration.

Position "MIN" = Idle speed position

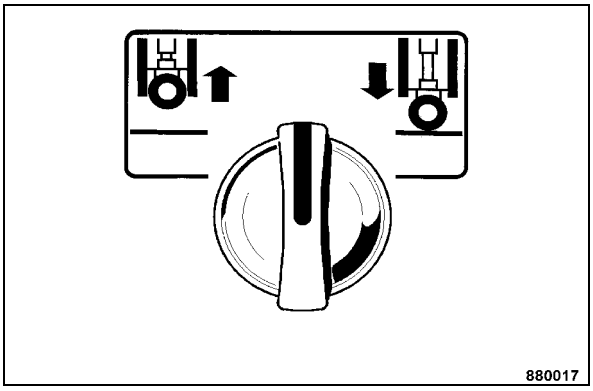

Fig. 41

No. 19 = Rotary push button for edge cutter[1]

Position "middle" = Edge cutter stops at the presently reached position

Position "left" = Edged cutter is raised.

Position "right" = Edged cutter is lowered.

1 Optional equipment

duma rent www.duma-rent.com

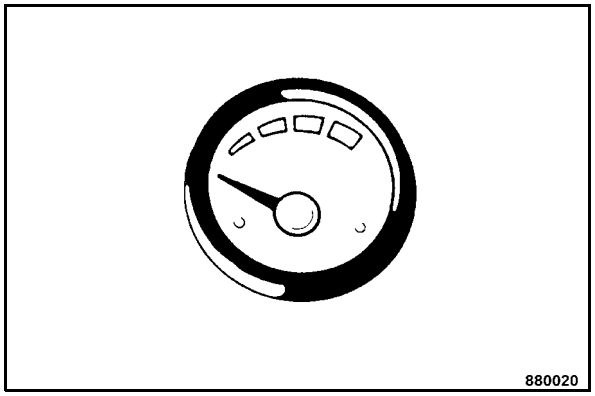

Fig. 42

No. 20 = Water level gauge

shows the water level inside the water tank.

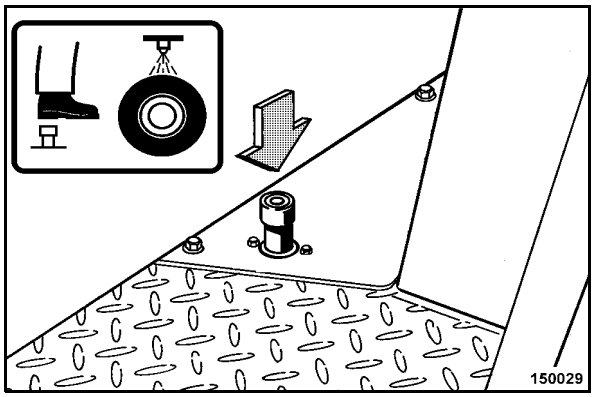

Fig. 43

No. 21 = Foot switch for tire sprinkler system (only AC)

press	=	Sprinkler system switched on
release	=	Sprinkler system switched off

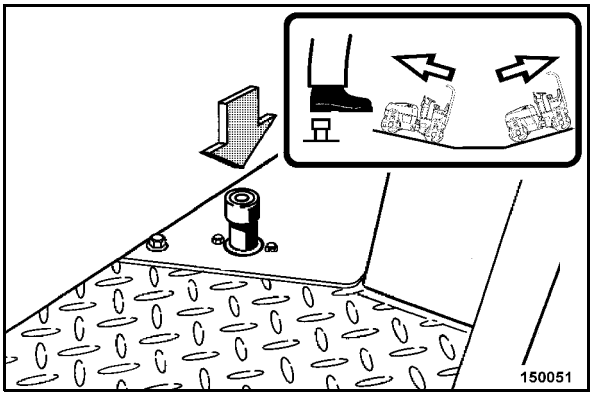

Fig. 44

Foot switch for flow divider[1] (only AD)

press	=	flow divider switched on
release	=	flow divider switched off

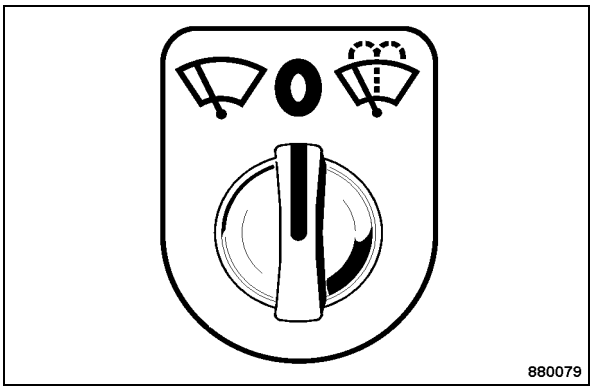

Fig. 45

No. 22 = Rotary switch/button for windscreen wiper/washer[2]

Position "left"	=	The windscreen wiper is switched on
Position "middle"	=	The windscreen wiper is switched off
Position "right" (button)	=	The windscreen wiper/washer is switched on

1 Optional equipment
2 Optional equipment

Indicators and Controls

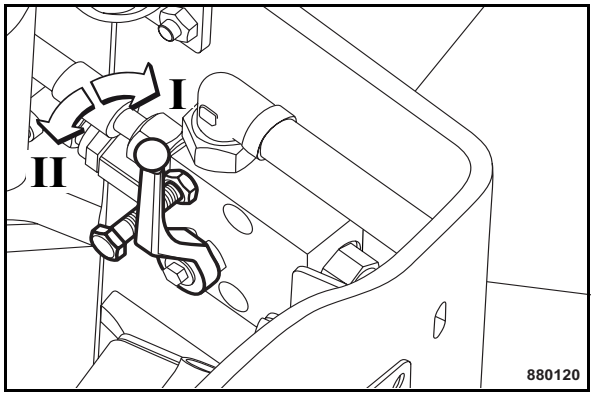

Fig. 46

No. 23 = Ball valve, brake releasing device (only AC)

⚠ Danger

Danger of accident!

Always secure the ball valve of the brake releasing feature with the locking screw when closed.

Before releasing the parking brake secure the machine against unintended rolling by using appropriate means (e.g. metal wheel chocks).

Strictly follow the description and the safety instructions in chapter "Towing".

Position "I" = Brake applied

Position "II" = Brake released

i Note

Release the brake by turning the steering wheel in clockwise direction.

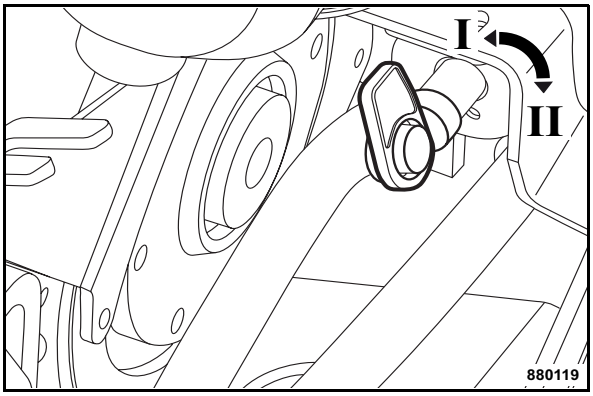

Fig. 47

No. 24 = Main battery switch[1]

i Note

The main battery switch is located inside the battery compartment.

Position "I" (90° up) = Disconnects the batteries from the vehicle electrics in case of burning cables and fire in the engine compartment, protection against unauthorized use, during welding work on the machine. Can be removed.

Position "II" (horizontal) = Operating position, engine can be started.

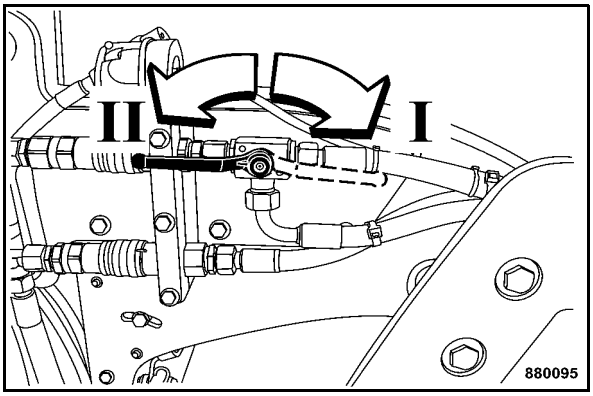

Fig. 48

No. 25 = Ball valve for chip spreader[2]

1 Optional equipment
2 Optional equipment

duma rent www.duma-rent.com

Position "I"	=	Pre-selection vibration, rear drum
Position "II"	=	Pre-selection chip spreader

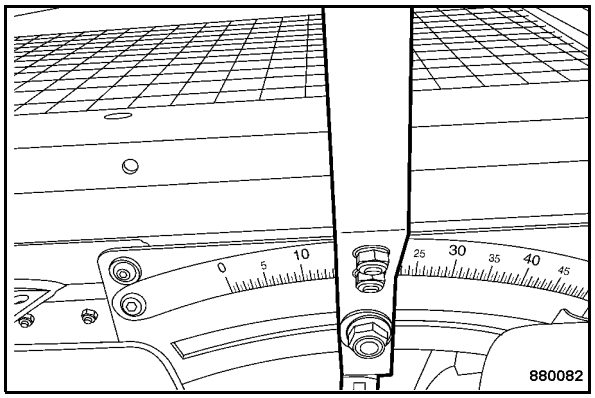

Fig. 49

No. 26 = Adjustment lever for chip quantity[1]

to the left	=	lower chip quantity
towards the right	=	higher chip quantity

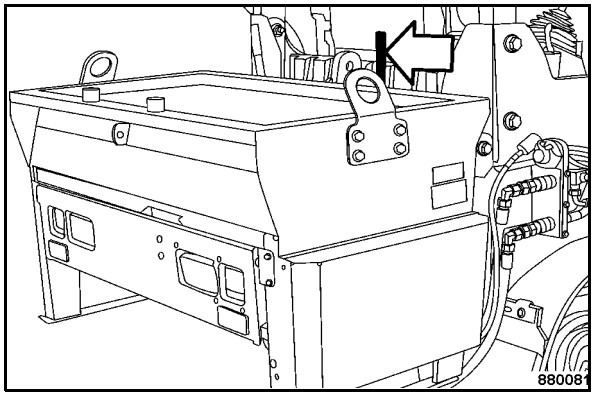

Fig. 50

No. 27 = Lever to slide the chip spreader[2]

to the left	=	The chip spreader slides to the left
to the right	=	The chip spreader slides to the right

1 Optional equipment
2 Optional equipment

Indicators and Controls

5 Operation

5.1 General

If you are not yet acquainted with the controls and indicating elements on this machine you should thoroughly read chapter "Indicators and control elements" before starting work.

All indicators and control elements are described in detail in this chapter.

5.2 Tests before taking into operation

Before the everyday use or before a longer working period the following tests and inspections must be performed.

⚠ Danger

Please observe strictly the safety regulations in the corresponding section of this instruction manual!

- Park the machine on ground as level as possible.

Check:

- fuel tank and fuel lines for leaks
- Screw connections
- function of steering
- function of emergency stop
- function of parking brake
- machine for cleanliness, damage
- presence of the appropriate operating and maintenance instructions
- proper maintenance of the machine

i Note

For a description of the following tasks refer to the chapter "maintenance every 10 operating hours".

- Engine oil level, top up if necessary
- Fuel level, top up if necessary.
- Hydraulic oil level, top up if necessary.
- Coolant level, top up if necessary
- Dry air filter service indicator
- Water level, top up if necessary.
- Emulsion level, top up if necessary
- Air pressure in tires
- Checking the chip spreader[1] and cleaning the spreading beam

1 Optional equipment

duma rent www.duma-rent.com

5.3 Electronic immobilizer[1]

Before starting the engine the anti-theft protection* must be disarmed by entering a code.

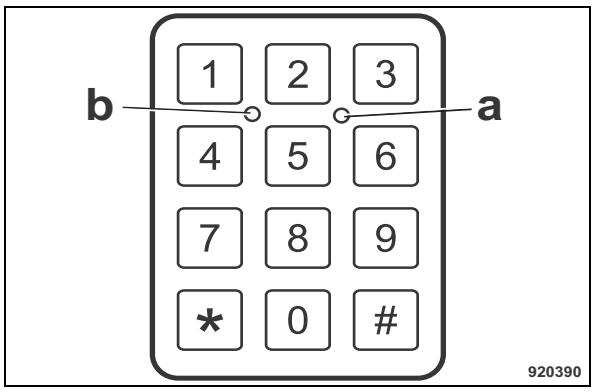

Fig. 51

i Note

With the electronic immobilizer armed, the light emitting diode (a) (Fig. 51) flashes slowly.

- Slowly enter the six-digit user code.

i Note

When entering the code, the light emitting diode (6) lights up with every digit.

- Press the diamond button.
- The electronic immobilizer is now disarmed and the engine can be started within the next 15 minutes.

1 Optional equipment

5.4 Adjusting the operator's seat

⚠ Danger

Danger of accident!

Do not adjust the seat while driving.

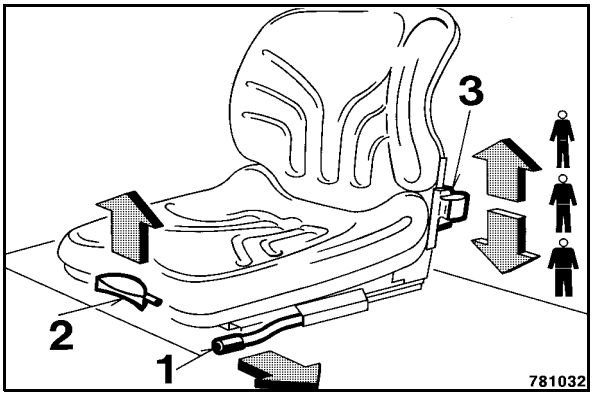

Fig. 52

- To adjust the seat in longitudinal direction push the lever 1 (Fig. 52) outwards.
- Pull the lever (2) up and adjust the backrest.
- Operate the lever (3) to adjust the weight of the operator.

i Note

In its setting the lever (3) is locked in upwards direction. This lock can be released by pressing the lever down against the end stop. Then adjust the operator's weight by sliding the lever downwards.

duma rent www.duma-rent.com

5.5 Starting the engine

Danger

Danger of accident! Danger of injury!

Wear your personal noise protection means (ear defenders) before starting operation.

Start the engine only from the operator's seat.

Caution

In this chapter it is assumed that the operator is fully acquainted with the function of the different control elements on the machine.

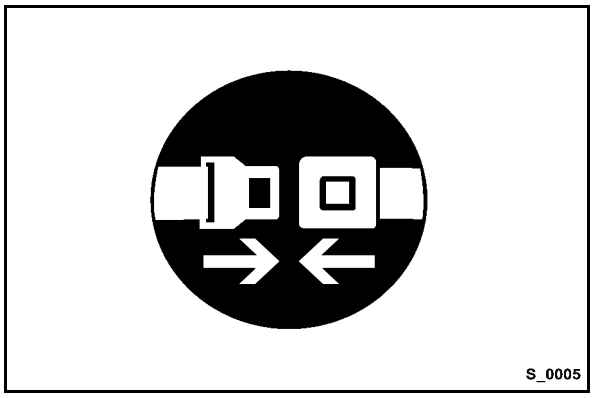

Fig. 53

- Fasten your seat belt (Fig. 53).

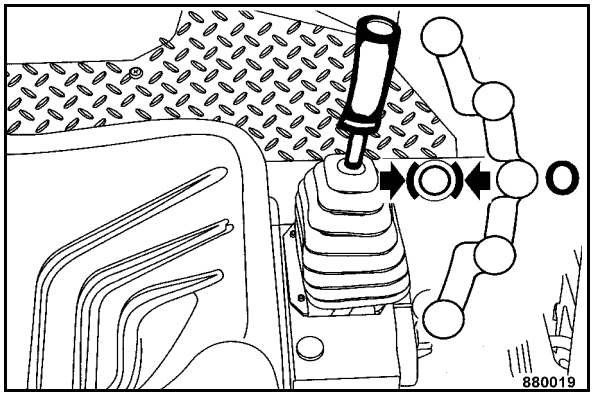

Fig. 54

- Shift the travel lever (Fig. 54) to position "0".

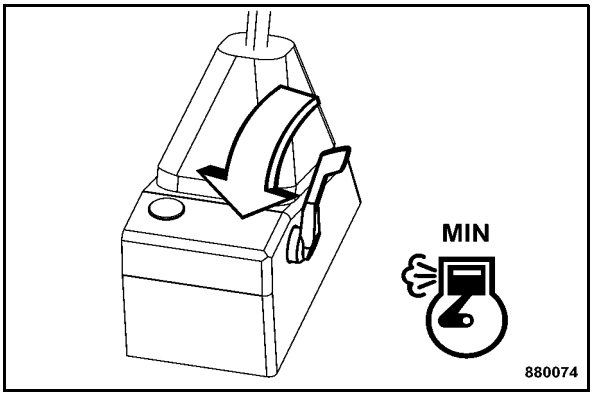

Fig. 55

- Set the throttle lever (Fig. 55) to position "MIN".

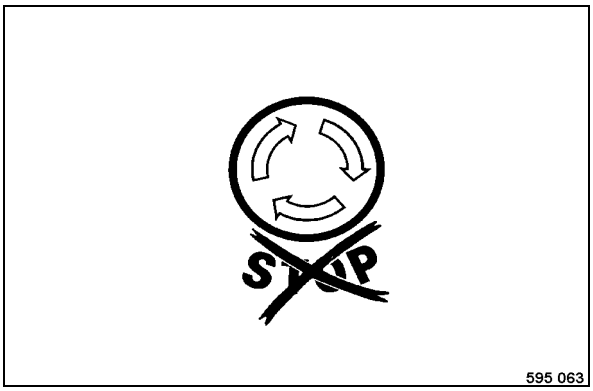

Fig. 56

- Check, whether the emergency stop switch (Fig. 56) is unlocked.

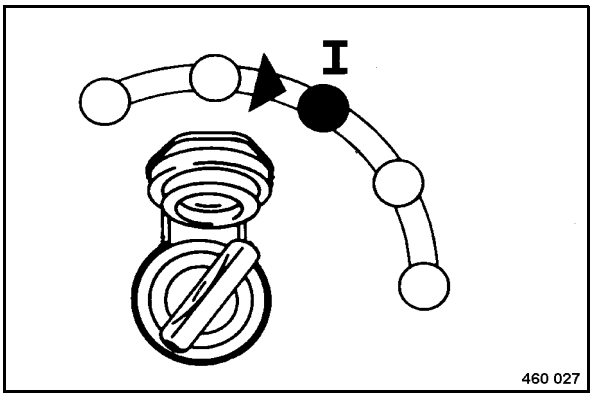

Fig. 57

- Turn the ignition key (Fig. 57) to position "I".

duma rent www.duma-rent.com

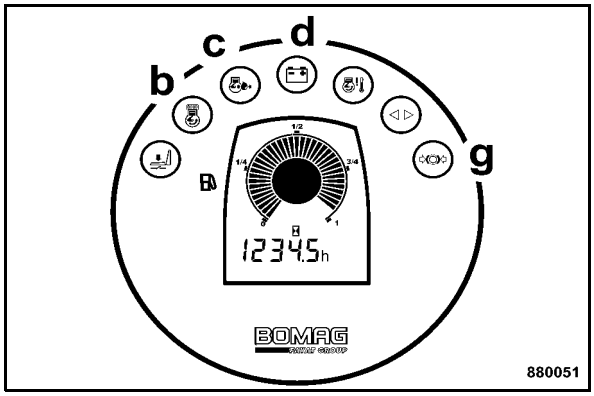

Fig. 58

All control and warning lights (Fig. 58) in the instrument cluster light up for approx. 3 seconds.

The engine oil pressure warning light (c) flashes, the charge control light (d) and the parking brake warning light (g) stay on.

⚠ Caution

Run the starting process for maximum 20 seconds without interruption and pause for a minute between starting attempts.

If the engine has not started after two attempts perform trouble shooting.

i Note

The starter switch is designed with a re-start lock. For a new starting attempt the ignition key must first be turned back to position "0".

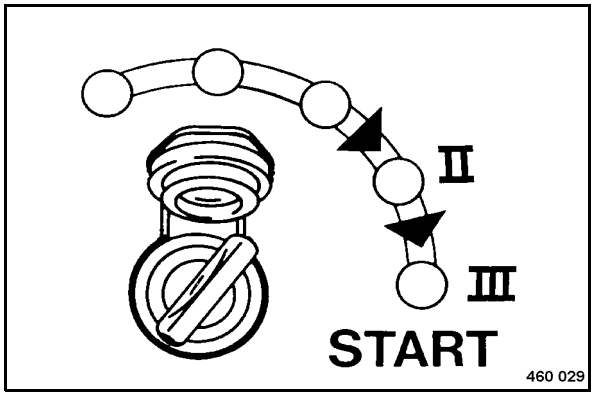

Fig. 59

- Turn the ignition key (Fig. 59) through position "II" to position "III", the starter will crank the engine.
- With cold ambient temperatures hold the ignition key up to 30 seconds in position "II"; the preheating control light (b) (Fig. 58) lights up.
- As soon as the engine ignites return the ignition key to position "I".

The engine oil pressure warning light and the charge control light go out. The parking brake warning light stays on.

⚠ Caution

Run the engine warm for a short while before starting work. Do not rev up a cold engine to high idle speed/full load speed.

5.6 Starting with jump wires

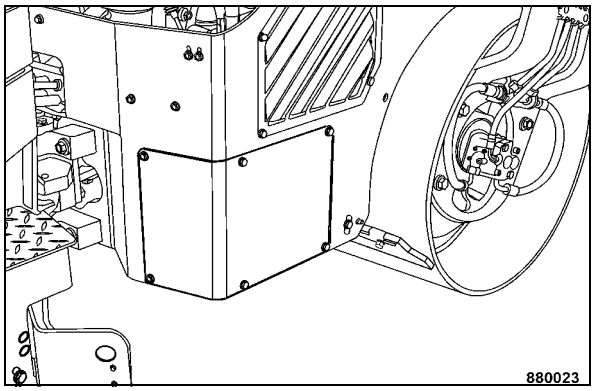

Fig. 60

- Remove the cover from the battery compartment (Fig. 60).

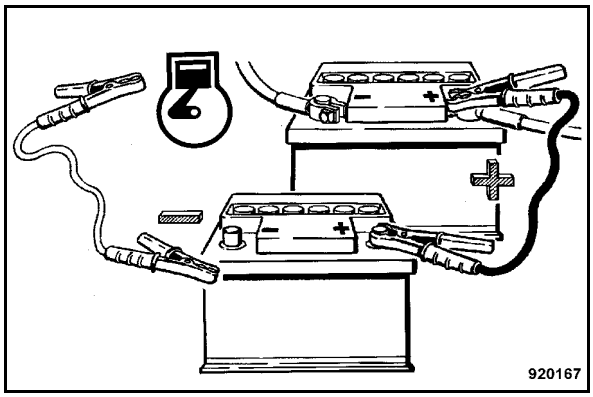

Fig. 61

⚠ Caution

A wrong connection will cause severe damage in the electric system.

- Only use a 12 Volt battery to bridge the machine.
- When jump starting with an external battery connect both plus poles first.
- Then connect the ground cable first to the minus pole of the current supplying battery and then to engine or chassis ground, as far away from the battery as possible (Fig. 61).
- Start as described under 'Starting the engine'.
- Once the engine is running switch on a powerful consumer (working light, etc.).

⚠ Caution

If no powerful consumer is switched on voltage peaks may occur when separating the connecting cables between the batteries, which could damage electrical components.

- After starting disconnect the negative poles (ground cable) first and the positive poles after.
- Switch off the consumer.
- Close the battery compartment with the cover.

duma rent www.duma-rent.com

5.7 Driving the machine

⚠ Danger

Danger of accident!

Wet and loose soils considerably reduce the ground adhesion of the machine on inclinations and slopes.

Soil conditions and weather influences impair the climbing ability of the machine.

Do not drive up and down inclinations which exceed the maximum gradability of the machine (see chapter "technical data").

Driving across slopes should therefore be strictly avoided, because of the high risk of tipping over and the related risk of severe or even fatal accidents.

You should therefore always drive straight up or down a slope.

For rollers with a drum width of 1 m or less there is a considerable risk of tipping over near edges (e.g. curbstones, embankments, trenches, potholes) when driving over these edges.

Do not drive without wearing your seat belt.

Always give way to loaded transport vehicles!

Before starting to drive make sure that the drive range is absolutely safe.

Drive and operate the machine only from the driver's seat.

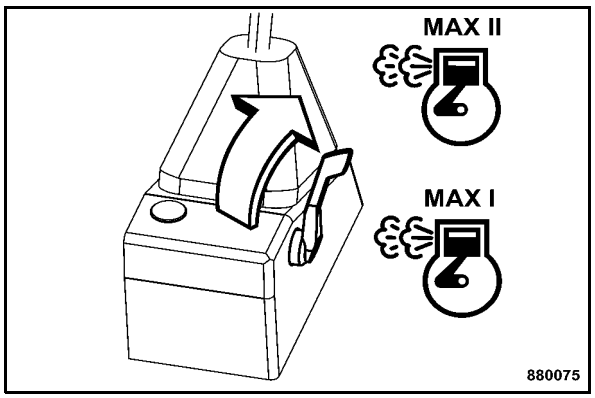

Fig. 62

- Set the throttle lever (Fig. 62) to full load position "Max I" or "MAX II".

⚠ Caution

During operation the throttle lever always remains locked in one of the full load positions. Control the travel speed with the travel lever.

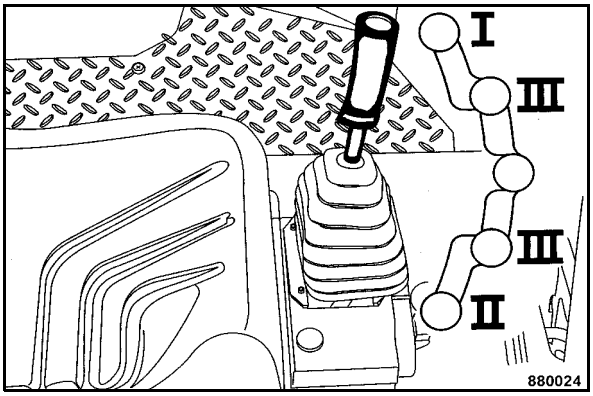

Fig. 63

⚠ Caution

Do not operate jerkily!

- Disengage the travel lever (Fig. 63) out of braking position and move it slowly to the desired travel direction.

Position "I"	=	max. forward travel without vibration
Position "II"	=	max. backward travel without vibration
Position "III"	=	Max. forward/backward travel with vibration

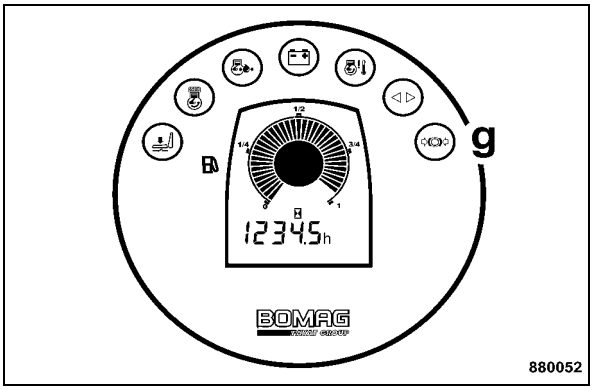

Fig. 64

The parking brake warning light (g) (Fig. 64) in the instrument cluster goes out.

duma rent www.duma-rent.com

Important notes on travel operation

⚠ Caution

When changing the travel direction hold the travel lever for a moment in "0"-position, until the machine has stopped, before actuating to the new travel direction.

Do not operate jerkily! Control the travel speed with the travel lever.

When driving up and down inclinations move the travel lever slowly back towards neutral to brake the machine.

Seat contact switch[1]

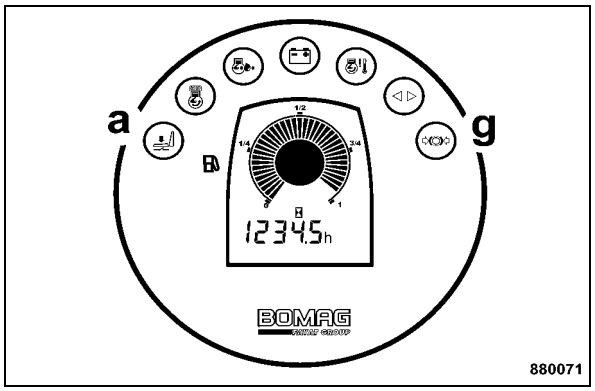

Fig. 65

With the machine parked the warning light for the seat contact switch (a) (Fig. 65) lights up together with the parking brake warning light (g) when the driver's seat is not occupied. The machine cannot drive.

i Note

When moving the travel lever out of braking position the engine will be shut down immediately.

⚠ Danger

Danger of accident!

If the seat is not occupied when the machine is driving, the warning buzzer will sound, the engine will be shut down after 4 seconds and the parking brake will close.

- To continue driving occupy the seat and put on the seat belt within 4 seconds. The warning lights go out and the warning buzzer stops to sound.
- If the engine stops restarting is required.

1 Optional equipment

duma rent www.duma-rent.com

5.8 Stopping the machine, operating the parking brake

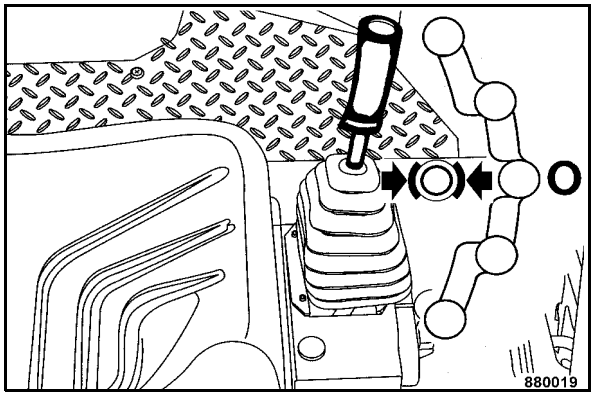

Fig. 66

- Shift the travel lever (Fig. 66) slowly to "0"-position.

The machine is automatically braked by the hydrostatic drive and the parking brake is applied.

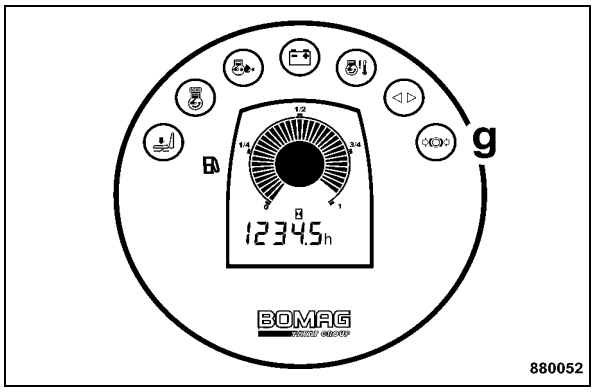

Fig. 67

The parking brake warning light (g) in the instrument cluster (Fig. 67) lights up.

5.9 Shutting down the engine

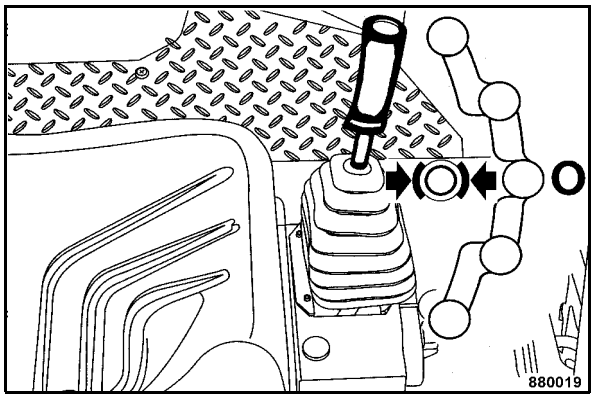

Fig. 68

- Shift the travel lever (Fig. 68) slowly to position 0.

The machine is automatically braked by the hydrostatic drive and the parking brake is applied.

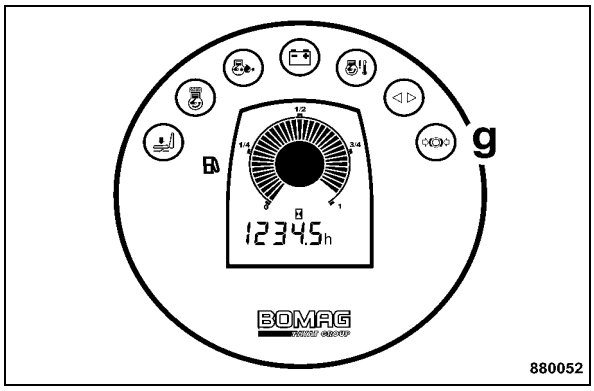

Fig. 69

The parking brake warning light (g) (Fig. 69) in the instrument cluster lights up.

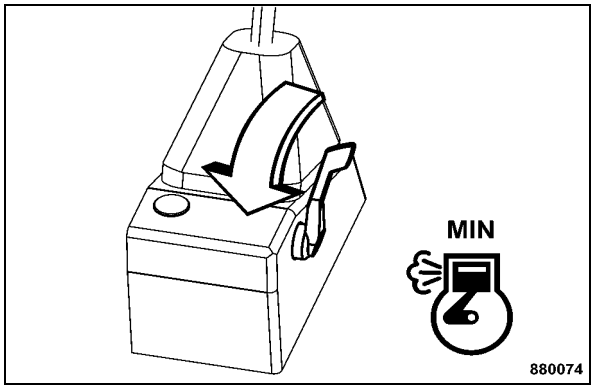

Fig. 70

- Set the throttle lever (Fig. 70) to position "MIN" (idle speed).

⚠ Caution

Do not shut down the engine all of a sudden from full load speed, but let it idle for about 2 minutes.

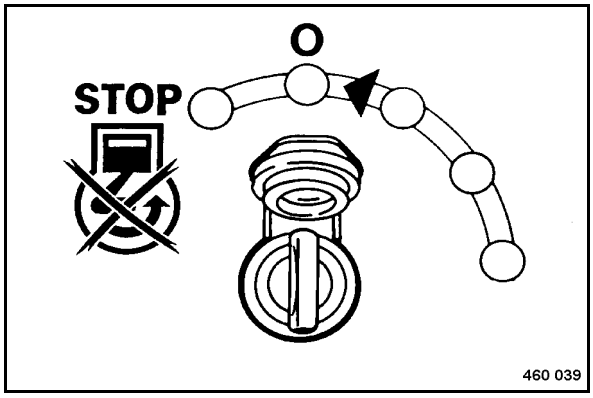

Fig. 71

- Turn the start switch (Fig. 71) to position "0" and pull out the ignition key.

⚠ Danger

Danger of accident!

Secure the machine against unauthorized use, pull the ignition key out.

Mark machines, which could be in the way, with a clearly visible sign.

5.10 Switching the vibration on and off

⚠ Danger

Risk of damage!

When compacting with vibration you must check the effect of nearby buildings and underground supply lines (gas, water, sewage, electric power), if necessary stop compaction with vibration.

⚠ Caution

Danger of bearing damage!

Do not activate the vibration on hard (frozen, concrete) ground.

⚠ Caution

Switch on vibration only with the throttle lever in full load position "MAX I" or "MAX II".

Vibration at standstill causes transverse ruts, therefore:

- switch the vibration on only after shifting the travel lever to the desired travel direction.
- Switch the vibration off before stopping the machine.

duma rent www.duma-rent.com

Pre-selecting vibration (only AD)

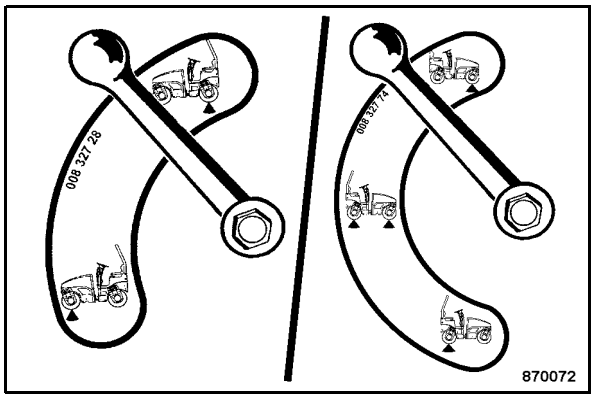

Fig. 72

⚠ Caution

Destruction of hydraulic components!

Switch the ball valve only when the vibration is switched off.

- Pre-select the desired drum or drums with the ball valve (Fig. 72).

Vibration in manual mode

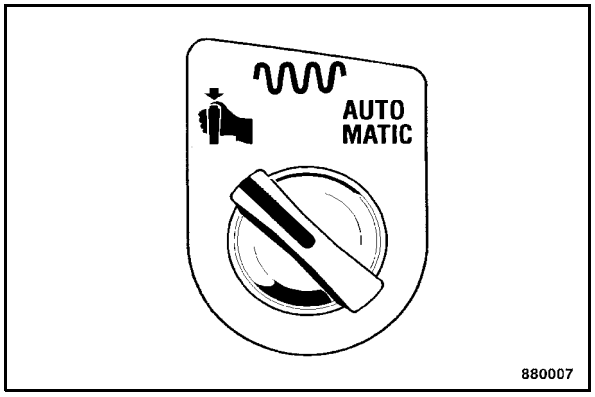

Fig. 73

- Turn the rotary switch for vibration in manual or automatic mode (Fig. 73) anti-clockwise to the symbol "Manual".

Switching the vibration on

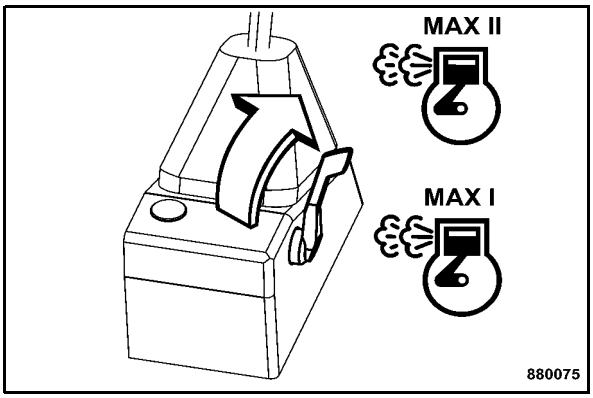

Fig. 74

- Set the throttle lever (Fig. 74) to position "Max I" or "MAX II".

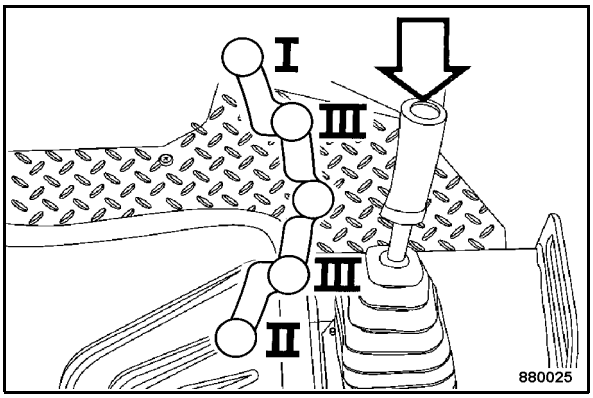

Fig. 75

- Actuate the vibration push button (Fig. 75) only after shifting the travel lever to the desired travel direction.

ℹ Note

When shifting the travel lever through position "III" to position "I" or "II", the vibration will be automatically switched off.

Switching the vibration off

⚠ Caution

Always switch the vibration off before stopping the machine.

- Press the vibration push button again.

Vibration in automatic mode

i Note

In automatic mode the vibration is switched on when exceeding a travel speed of 1.3 km/h.

Vibration is switched off at a speed below 1.3 km/h.

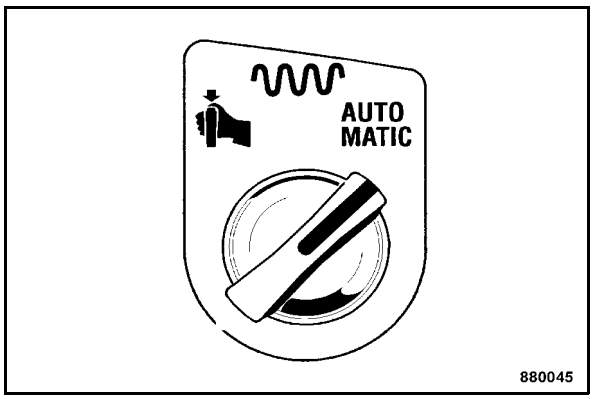

Fig. 76

- Turn the rotary switch for vibration in manual or automatic mode (Fig. 76) clockwise to the symbol "AUTOMATIC".

Switching the vibration on

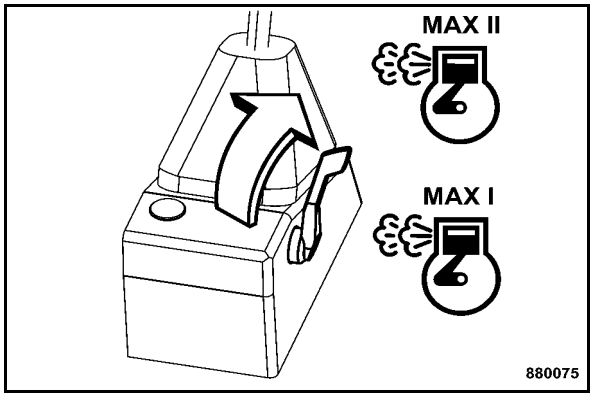

Fig. 77

- Set the throttle lever (Fig. 77) to position "Max I" or "MAX II".

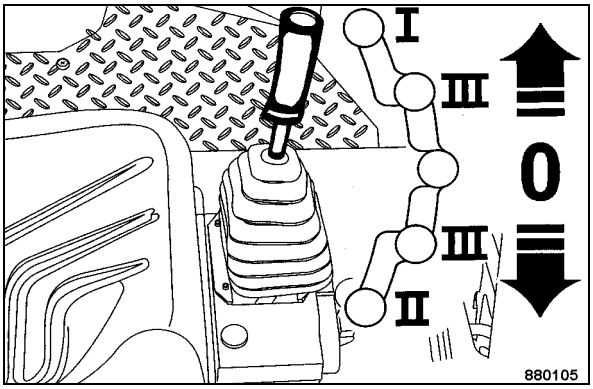

Fig. 78

- Pull the travel lever (Fig. 78) out of zero position (braking position) and shift it slowly to the desired travel direction forward or backwards ("III")

i Note

The vibration comes on at a low travel speed.

When shifting the travel lever through position "III" to position "I" or "II", the vibration will be automatically switched off.

Switching the vibration off

- Shift the travel lever slowly to position 0.

The machine is decelerated and the vibration will automatically switch off at a low travel speed.

duma rent www.duma-rent.com

5.11 Switching the gravity sprinkling system on and off

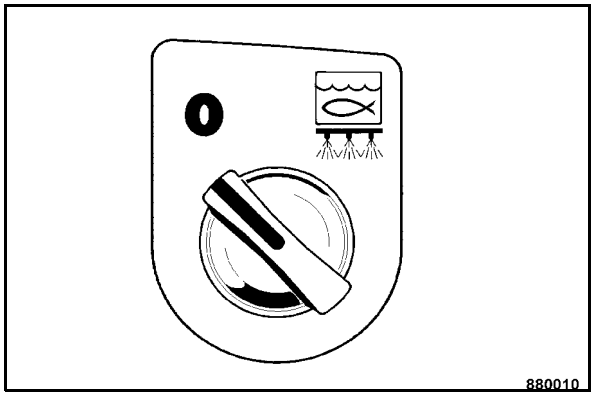

Fig. 79

- Turn the rotary switch for gravity feed sprinkling system (Fig. 79) to the right, the gravity feed sprinkling system is switched on.
- Turn the rotary switch for gravity feed sprinkling system to the left, the gravity feed sprinkling system is switched off.

5.12 Switching the pressure sprinkling system[1] on and off

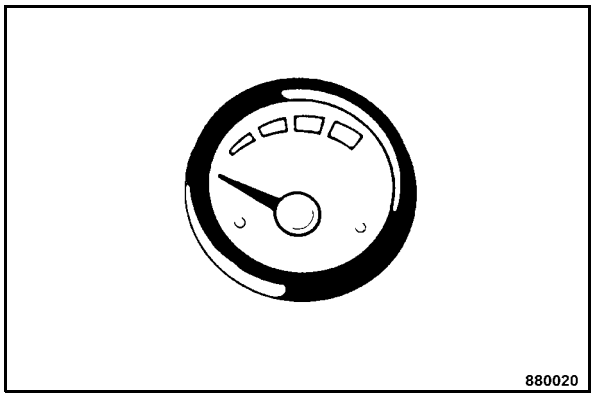

Fig. 80

- Check the water level indicator on the water tank (Fig. 80) whether the water tank is filled.

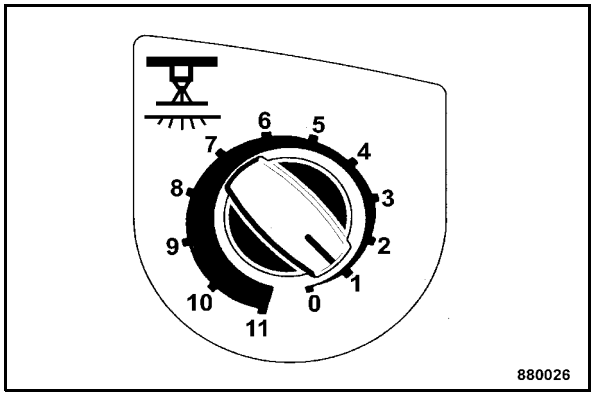

Fig. 81

- Switch the interval switch for pressure sprinkling (Fig. 81) to the desired flow interval.

Position "0"	=	Sprinkler system switched off
Position "1" to "10"	=	Interval sprinkling pre-selected
Position "11"	=	Permanent sprinkling pre-selected

1 Optional equipment

Operation

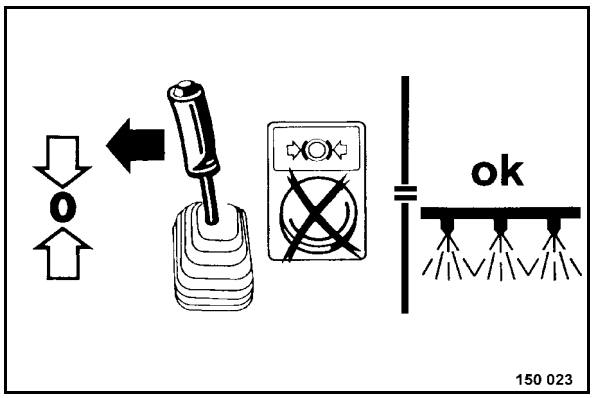

Fig. 82

- Shift the travel lever out of braking position towards "0"-position (Fig. 82) to switch the pressure sprinkler system on .

i Note

The sprinkler system will only work when the travel lever is in direction "0"-position. This is also the testing position for interval position "11".

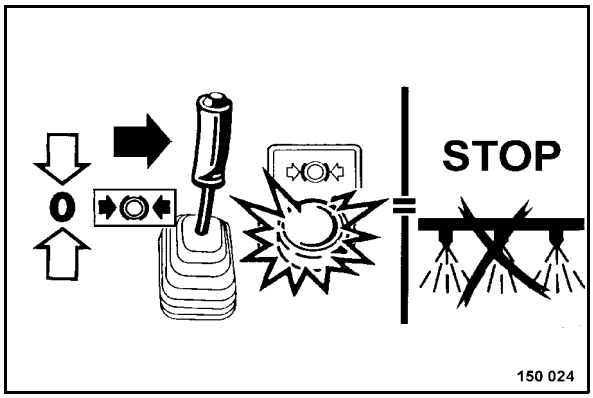

Fig. 83

- To switch off the pressure sprinkler system return the travel lever to the position "brake closed" (Fig. 83).

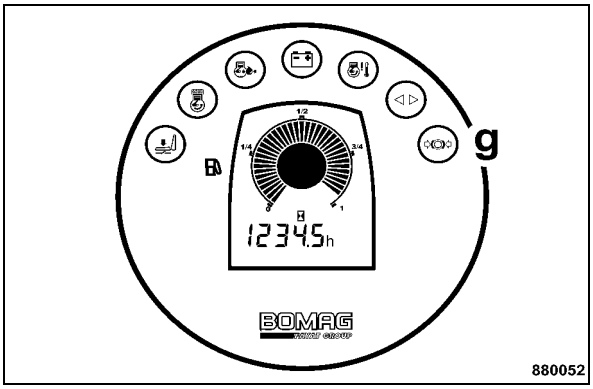

Fig. 84

i Note

The parking brake warning light (g) (Fig. 84) in the left hand instrument cluster lights up.

With the pressure sprinkler system switched on sprinkling will continue for another 30 seconds.

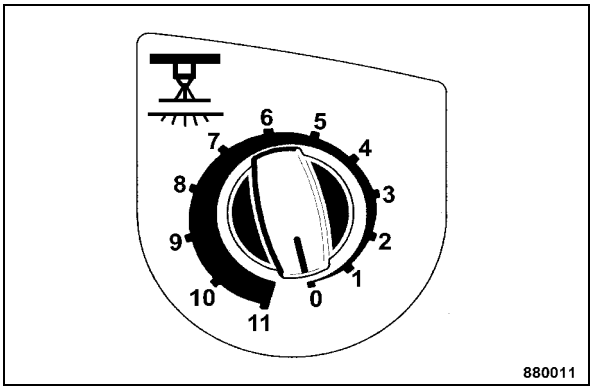

Fig. 85

- To switch off the pressure sprinkling system switch the interval switch for pressure sprinkling (Fig. 85) to position "0".

duma rent www.duma-rent.com

5.13 Switching the tire sprinkling system on and off (only AC)

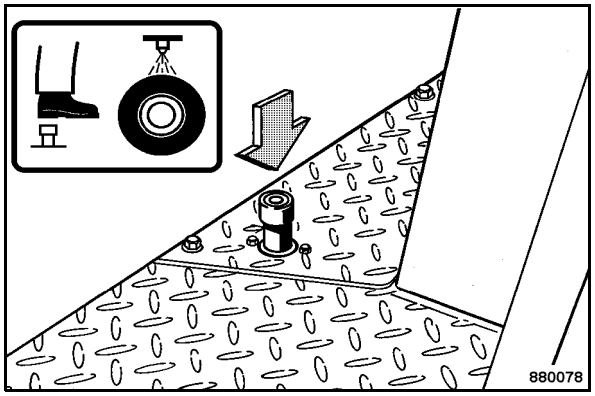

Fig. 86

- Actuate the foot switch (Fig. 86).

The tire sprinkling system is switched on.

- Release the foot switch.

The tire sprinkling system is switched off.

5.14 Actuating the emergency stop switch

⚠ Danger

Danger of accident!

In events of emergency and in case of danger actuate the emergency stop switch immediately.

Start travel operation of the machine only after the danger that caused the actuation of the emergency stop switch has been eliminated.

⚠ Caution

Do not use as service brake. The deceleration is extremely high. In case of frequent use the wear on the multi-dics brakes will be very high.

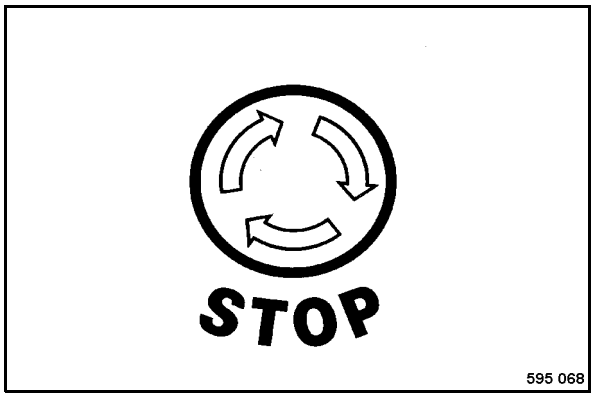

Fig. 87

- Press the button of the emergency stop switch (Fig. 87) completely down, it automatically locks in fully pressed position.

i Note

Shuts the engine down and closes the brake.

- Turn the button clockwise to unlock the emergency stop switch.
- Start the engine again, see chapter "Starting the engine".

5.15 Mounting/removing the chip spreader[1]

Danger

Danger of accident!

When mounting or removing the chip spreader do not step between the chip spreader and the machine while the engine is running.

Park the machine on a level and solid base to mount or remove the chip spreader and shut down the engine.

Mount and remove the chip spreader when it is empty.

Mounting the chip spreader

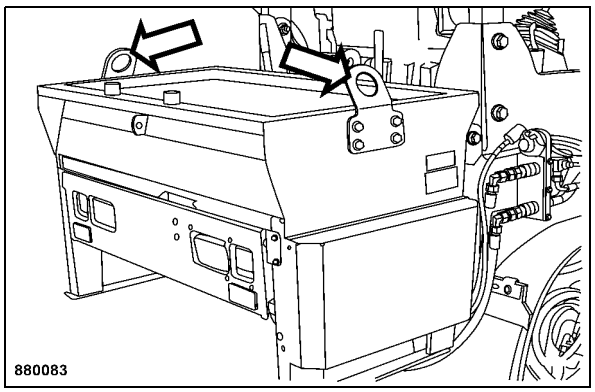

Fig. 88

- Lift the chip spreader by the lifting points (Fig. 88) and hook it carefully into the fixing points on the machine.

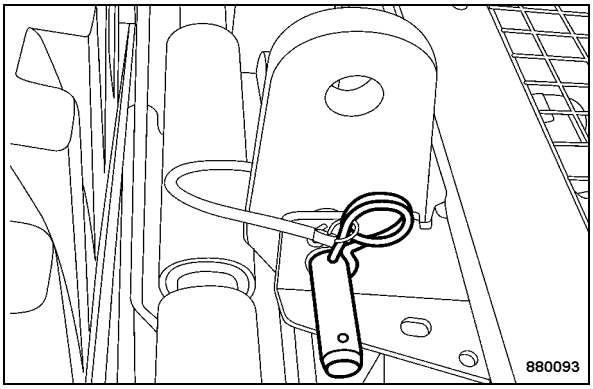

Fig. 89

- Insert the bolt (Fig. 89) and secure it with the cotter pin.

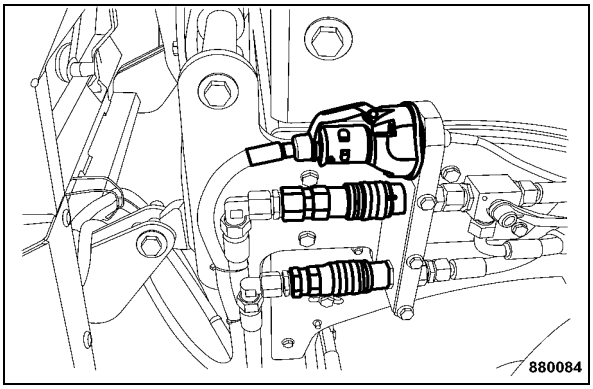

Fig. 90

- Connect the chip spreader hydraulically and electrically with the machine (Fig. 90).

Disassembling the chip spreader

- Empty the chip spreader, see section "Filling/emptying the chip spreader".

Danger

Danger of accident!

Always stand the chip spreader on level and firm ground.

1 Optional equipment

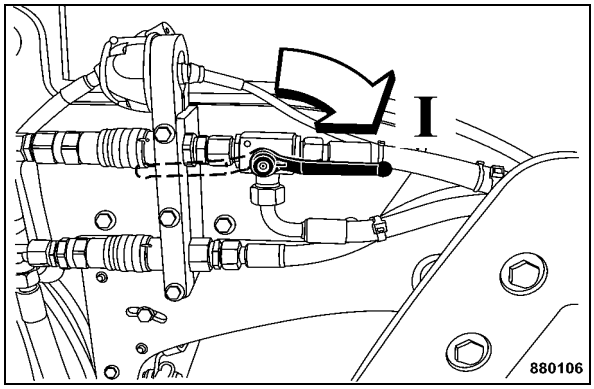

Fig. 91

- Turn the ball valve for the chip spreader to position "I" (Fig. 91).

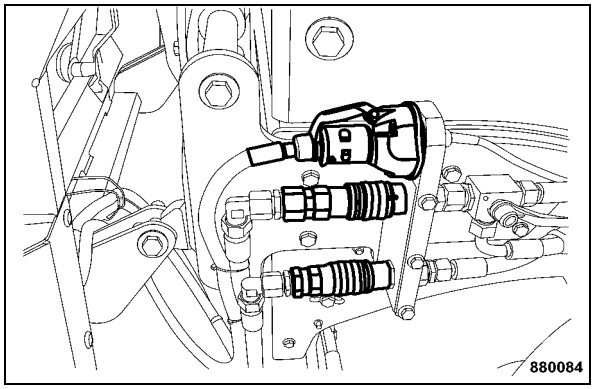

Fig. 92

- Disconnect the chip spreader hydraulically and electrically from the machine (Fig. 92).

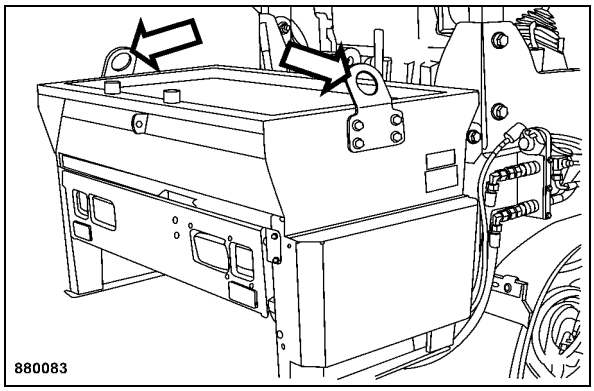

Fig. 93

- Hook the chip spreader to the fastening points (Fig. 93).

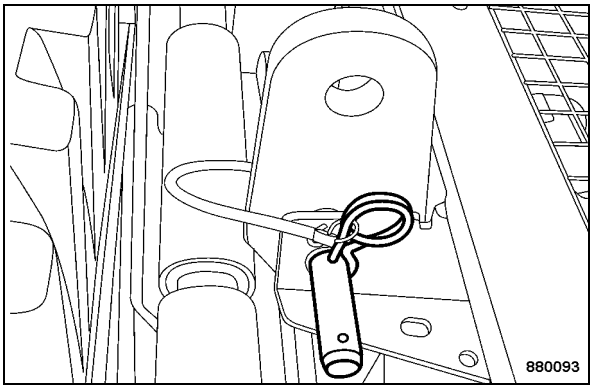

Fig. 94

⚠ Danger

Danger of accident!

Before pulling out the bolt (Fig. 94) make sure that the chip spreader is mounted correctly.

- Remove the cotter pin and pull out the bolt.
- Lift the chip spreader out of the fastening points on the machine and place it on level and firm ground.

duma rent www.duma-rent.com

5.16 Filling/emptying the chip spreader[1]

Filling

⚠ Caution

Fill only with dry chippings.

The chippings must not contain more than 1% of asphalt, otherwise the spreading beam may become stuck.

Do not fill with more than 200 litres of chippings, as otherwise the permitted total weight would be exceeded.

The temperature of the material to be spread must not exceed 80°C, as otherwise the shaft will be damaged.

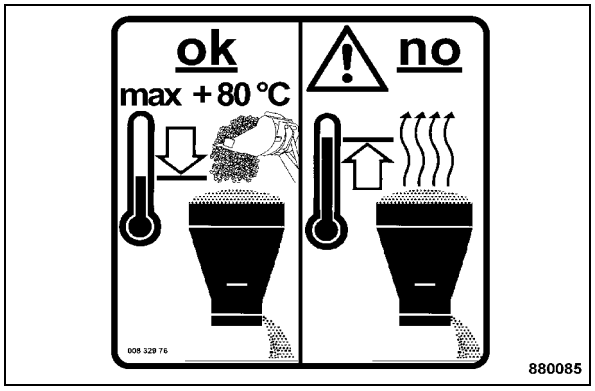

Fig. 95

- Fill the chippings container with no more than 200 litres of chippings (Fig. 95) (specific weight of chippings 1.5 t/m³).

Emptying

⚠ Danger

Danger of injury!

Never enter the spreader shaft area while the spreader shaft is running.

Empty the hopper only with the engine off.

1 Optional equipment

ℹ Note

Always empty the chipping hopper before transporting the machine.

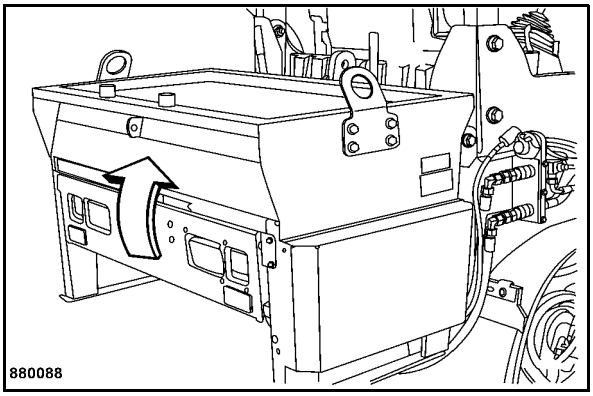

Fig. 96

- Fold up the flap (Fig. 96) .

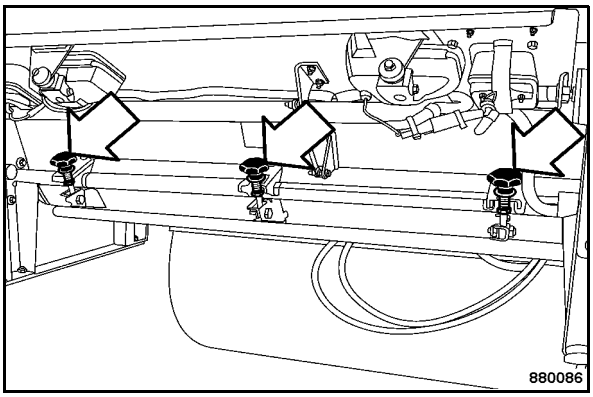

Fig. 97

- Loosen the star knobs (Fig. 97) , fold down the spreading screed and allow the chipping to trickle out.
- Clean the spreading screed.

duma rent www.duma-rent.com

5.17 Operating the chip spreader[1]

Preparing the spreading process

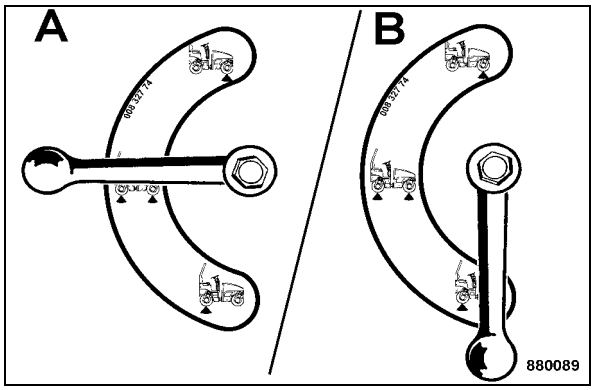

Fig. 98

- Turn the vibration ball valve down (B) (Fig. 98) for chip spreading without vibration.
- Turn the vibration ball valve to horizontal position (A) for chip spreading with vibration of front drum.

⚠ Caution

With the ball valve in horizontal position (A) (Fig. 98) follow the instructions for work with vibration, see chapter "Switching vibration on and off".

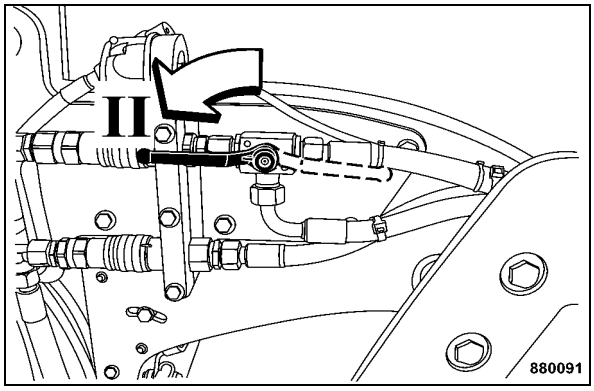

Fig. 99

- Turn the ball valve for the chip spreader to position "II" (Fig. 99).

1 Optional equipment

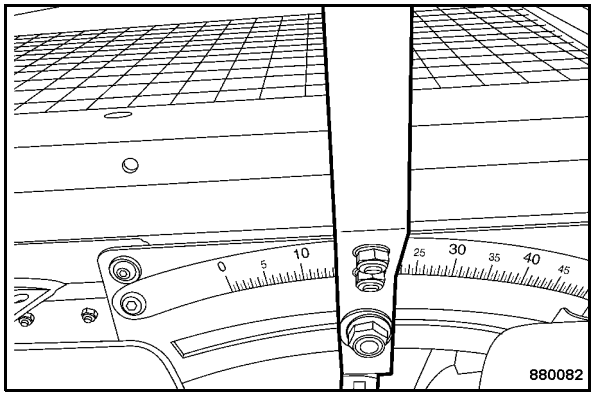

Fig. 100

- Set the required chipping quantity with the chipping quantity adjustment lever (Fig. 100).

i Note

The setting may be corrected while travelling.

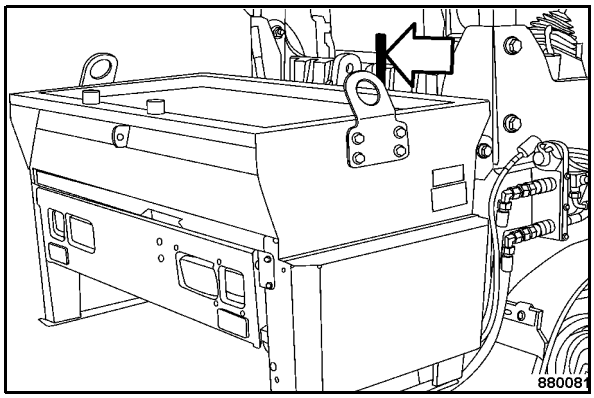

Fig. 101

- Operate the lever (Fig. 101) to slide the chip spreader to left or right to the desired speading position.

Switching the chip spreader on and off

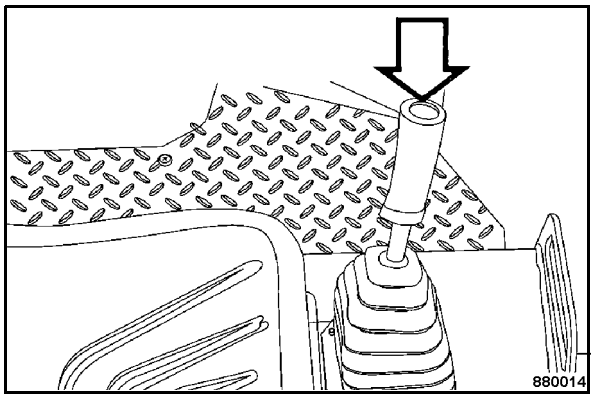

Fig. 102

- Switch the chip spreader on and off with the vibration button (Fig. 102).

5.18 Towing

⚠ Danger

Danger of accident! Danger of injury!

Before releasing the parking brake secure the machine against unintended rolling by using appropriate means (e.g. metal wheel chocks).

Use a towing vehicle with sufficient traction and braking power for the unbraked towed load.

Use a tow bar.

Using the machine as towing vehicle is not permitted.

The machine cannot be steered.

Do not touch hot engine parts.

⚠ Caution

Tow the machine only after having released the parking brake.

Towing speed 1 km/h, max. towing distance 500 m.

With the chip spreader[1] attached the machine must not be towed backwards.

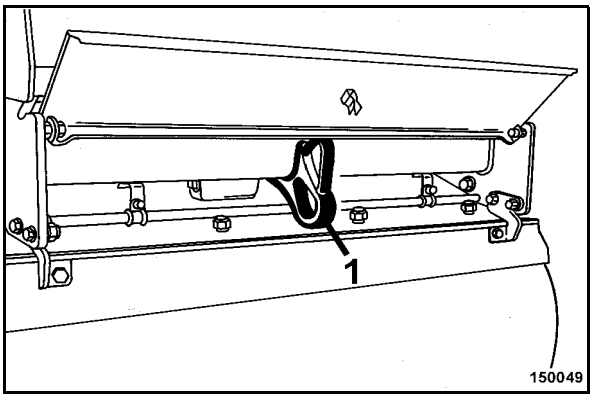

Fig. 103

- Tow the machine by the front or rear towing eye 1 (Fig. 103).

1 Optional equipment

Releasing the brake (only AD)

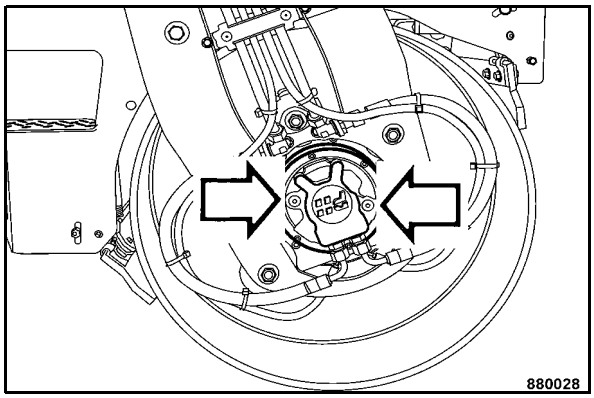

Fig. 104

- Remove two plugs (Fig. 104).

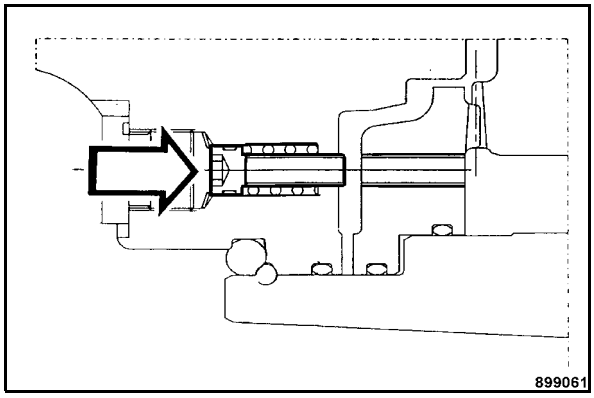

Fig. 105

- Press both screws (Fig. 105) in against springs.
- Tighten both screws alternately and in steps with 35 Nm until they bottom.

Releasing the brakes on drum and rubber wheels (only AC)

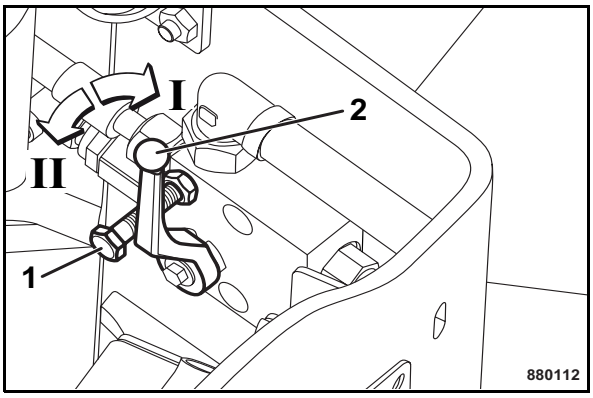

Fig. 106

- Unscrew the fastening screw (1) (Fig. 106).
- Switch the ball valve (2) over.

Position "II" = Brake released

- Turn the steering wheel slowly approx. two turns in clockwise direction.

After towing

⚠ Danger

Danger of accident!

Before loosening the drawbar secure the machine against unintended rolling by using appropriate means (e.g. metal wheel chocks).

The machine must only be started without the mechanical brake releasing device being activated.

Always secure the ball valve of the brake releasing feature (only AC) with the locking screw.

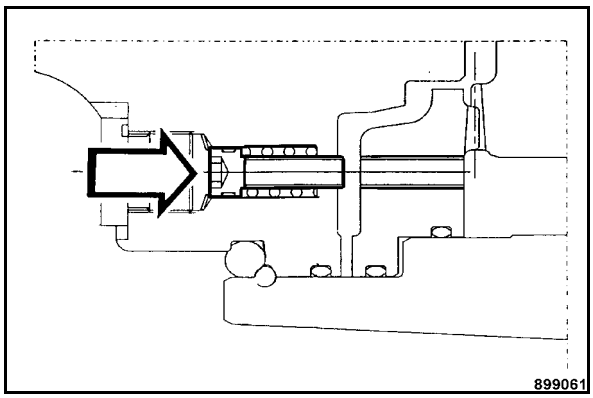

Fig. 107

- Completely release both screws (Fig. 107) to close the brake.

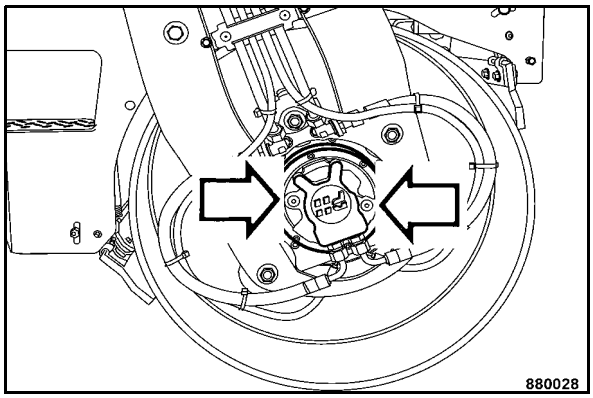

Fig. 108

- Screw both plugs (Fig. 108) back in and tighten them with 20 Nm.

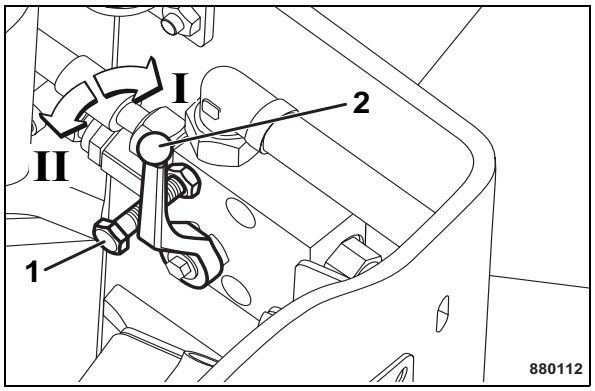

Fig. 109

- Switch the ball valve (2) (Fig. 109) back to position "I", turn the locking screw back in and counter it with the hexagon nut (only AC-machines).

duma rent www.duma-rent.com

5.19 Loading/transport

Loading with loading ramp

⚠ Danger

Danger of accident! Life hazard!

Use only stable loading ramps of sufficient load bearing capacity. The ramp inclination must be less than the gradability of the machine.

Make sure that persons are not endangered by the machine tipping or sliding off.

During demonstration and when loading the machine do not remain in the danger zone of the machine.

After driving the machine onto the transport vehicle attach the articulation lock .

⚠ Caution

Always empty the chip spreader [1] before transport.

- Drive the machine carefully on the transport vehicle.

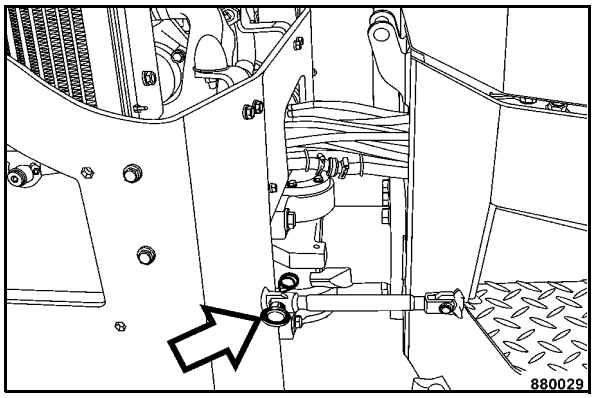

Fig. 110

- After driving the machine onto the transport vehicle swing the articulation lock (Fig. 110) out of its receptacle and fasten it with the bolt to the eye. Secure the bolt with the cotter pin.

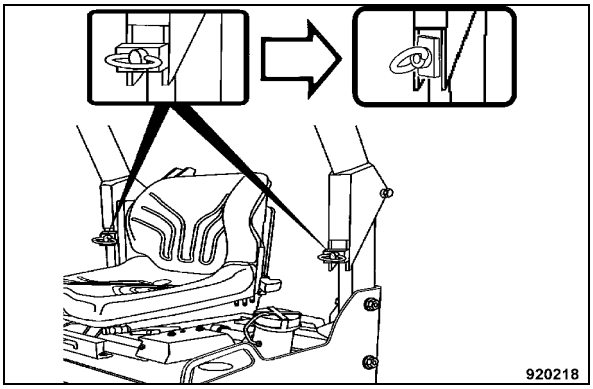

Fig. 111

- Fold down the foldable ROPS[2] for transport. Loosen the eye bolts (Fig. 111) and adjust the clamping plates vertically.
- Fold the foldable ROPS back.

Loading by crane

⚠ Danger

Danger of accident! Life hazard!

Engage the articulation lock.

Always use shackles on the lifting points for loading the machine.

Check all lifting points for damage before lifting the machine. Do not use a damaged or in any other way impaired lifting and points.

Lifting tackle must only be attached to loads by expert personnel (qualified person).

Lift the machine only with suitable lifting gear. Use only safe lifting gear of sufficient load bearing capacity Minimum lifting capacity of lifting gear: see operating weight in chapter "Technical Data".

Do not lift or lower the machine jerkily.

The tension must always be effective in vertical direction.

The machine must not swing about when being lifted.

Do not step or stand under suspended loads.

1 Optional equipment

2 Optional equipment

⚠ Caution

Always empty the chip spreader [1] before transport.

- Engage the articulation lock.
- Fold down the foldable ROPS[2]

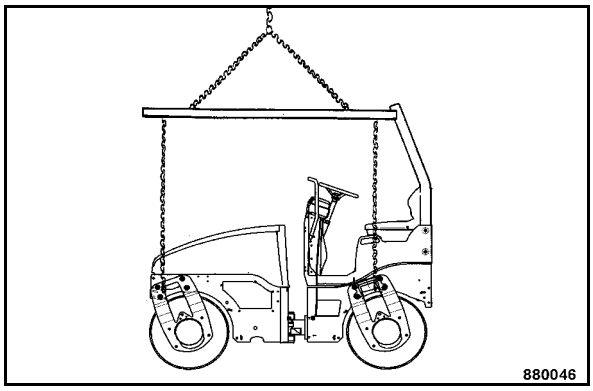

Fig. 112

- Use the four lifting eyes (Fig. 112) on the support legs to lift the machine.

Loading with a lifting belt[3]

⚠ Danger

Danger of accident! Life hazard!

With the chip spreader attached the machine must not be lifted with lifting belts, because of the changed centre of gravity.

Engage the articulation lock.

Check all lifting tackle for damage before lifting the machine. Do not use damaged or in any other way impaired lifting tackle.

Lifting tackle must only be attached to loads by expert personnel (qualified person).

Do not overload the lifting belt.

Use only safe lifting gear of sufficient load bearing capacity Minimum lifting capacity of lifting gear: see operating weight in chapter "Technical Data".

Do not lift or lower the machine jerkily.

The tension must always be effective in vertical direction.

The machine must not swing about when being lifted.

Do not step or stand under suspended loads.

After lifting hook the lifting belt back into its receptacle.

Have the lifting tackle inspected by an expert (properly trained person) once every year.

After 5 years replace the lifting belt with a new one.

- Engage the articulation lock.
- Fold down the foldable ROPS[4]
- Fold the vandalism protection down to protect the dashboard.

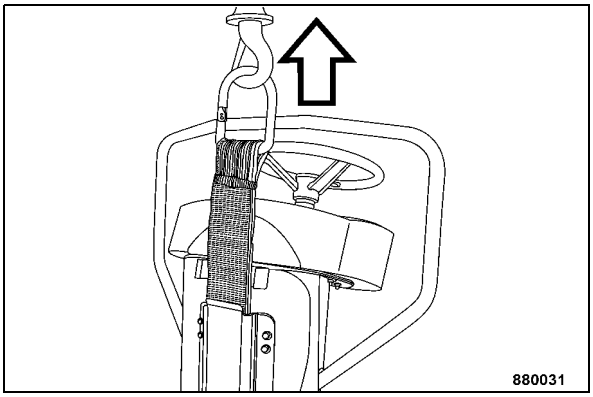

Fig. 113

- To lift the machine pull out the lifting eye from the bracket and hook it into the lifting gear (Fig. 113).

1 Optional equipment
2 Optional equipment
3 Optional equipment

4 Optional equipment

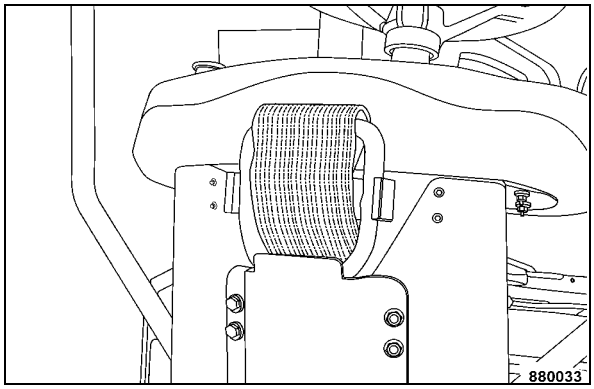

Fig. 114

- Reattach the lifting eye to the bracket after the lifting process (Fig. 114).

Lashing

⚠ Danger

Danger of accident! Life hazard!

Always use shackles on the lifting points for lashing down the machine.

Check all lashing points for damage before lashing down the machine. Do not use a damaged or in any other way impaired lashing points.

Lash the machine down, so that it is secured against rolling, sliding and turning over.

⚠ Caution

Never attach the lashing gear to the chip spreader.

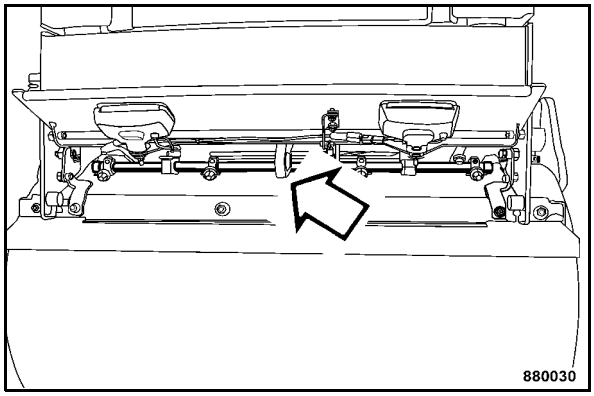

Fig. 115

- Fold up the covers on front and rear frames.
- Lash the machine down, so that it is secured against rolling, sliding and turning over. Use the lashing eyes (Fig. 115) on front and rear frame for this purpose.

After transport

⚠ Danger

Life hazard!

Operate the machine only with the foldable ROPS[1] properly fastened and the fastening screws tightened with the correct tightening torque.

After transport release the articulation lock again and store it in the receptacle.

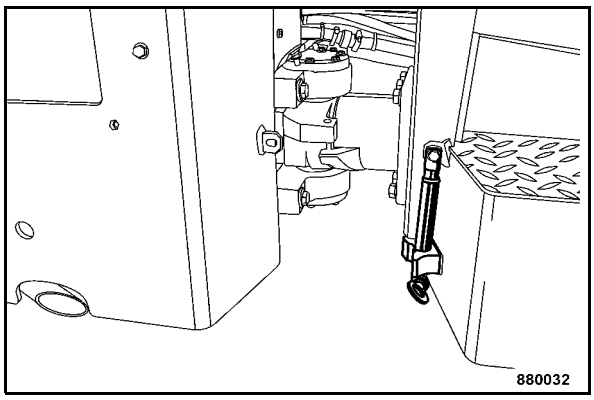

Fig. 116

- Pull the bolt out of the articulation locking bar and swing the locking bar back into its receptacle (Fig. 116).

1 Optional equipment

Operation

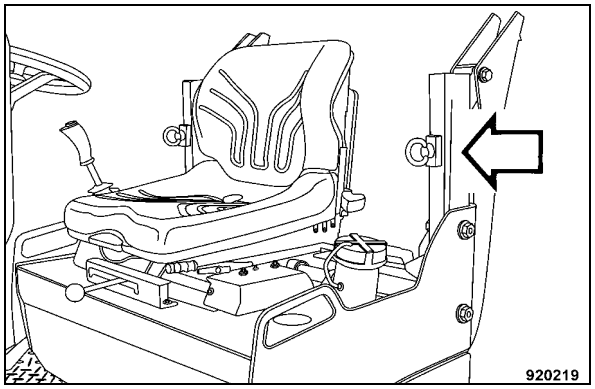

Fig. 117

- To fold up the foldable ROPS align the clamping plates on both sides vertically (Fig. 117).

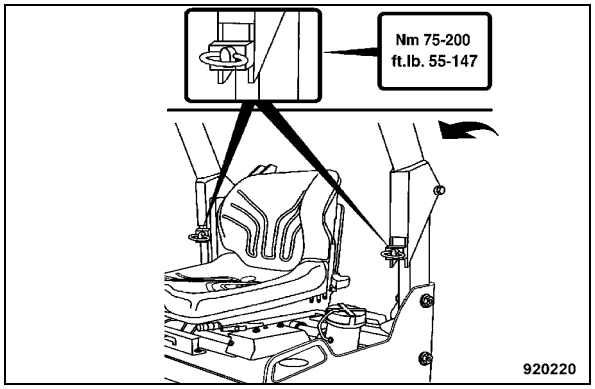

Fig. 118

- Fold up the foldable ROPS (Fig. 118).
- Turn the clamping plates to horizontal position and tighten the eye bolts with a tightening torque of 75 - 200 Nm.

6 Maintenance

6.1 General notes on maintenance

When performing maintenance work always comply with the appropriate safety regulations.

Thorough maintenance of the machine guarantees far longer safe functioning of the machine and prolongs the lifetime of important components. The effort needed for this work is only little compared with the problems that may arise when not observing this rule.

The terms right/left correspond with travel direction forward.

- Always clean machine and engine thoroughly before starting maintenance work.
- For maintenance work stand the machine on level ground.
- Always remove the main battery switch for all maintenance work.
- Perform maintenance work only with the motor switched off.
- Relieve hydraulic pressures before working on hydraulic lines.
- Before working on electric parts of the machine disconnect the battery and cover it with insulation material.
- When working in the area of the articulated joint attach the articulation lock (transport lock).

Environment

During maintenance work catch all oils and fuels and do not let them seep into the ground or into the sewage system. Dispose of oils and fuels environmentally.

Keep used filters in a separate waste container and dispose of environmentally.
Catch biodegradable oils separately.

Notes on the fuel system

The lifetime of the diesel engine depends to a great extent on the cleanliness of the fuel.

- Keep fuel free of contaminants and water, since this will damage the injection elements of the engine.
- Drums with inside zinc lining are not suitable to store fuel.
- When choosing the storage place for fuel make sure that spilled fuel will not harm the environment.
- Do not let the hose stir up the slurry at the bottom of the drum.
- The fuel drum must rest for a longer period of time before drawing off fuel.
- The rest in the drum is not suitable for the engine and should only be used for cleaning purposes.

Notes on the performance of the engine

On diesel engines both combustion air and fuel injection quantities are thoroughly adapted to each other and determine power, temperature level and exhaust gas quality of the engine.

If your engine has to work permanently in "thin air" (at higher altitudes) and under full load, you should consult the customer service of BOMAG or the customer service of the engine manufacturer.

Notes on the cooling system

Prepare and check coolant with highest care, since otherwise the engine may be damaged by corrosion, cavitation and freezing.

The coolant is prepared by mixing a cooling system protection agent (ethylene glycol) into the coolant.

Mixing with cooling system protection agent is necessary in all climatic zones. It prevents corrosion, lowers the freezing point and raises the boiling point of the coolant.

Notes on the hydraulic system

During maintenance work on the hydraulic system cleanliness is of major importance. Make sure that no dirt or other contaminating substances can enter into the system. Small particles can produce flutes in valves, cause pumps to seize, clog nozzles and pilot bores, thereby making expensive repairs inevitable.

- If, during the daily inspection of the oil level the hydraulic oil level is found to have dropped, check all lines, hoses and components for leaks.

duma rent www.duma-rent.com

- Seal external leaks immediately. If necessary inform the responsible customer service.
- Do not store drums with hydraulic oil outdoors, or at least under a cover. Water can be drawn in through the bunghole when the weather changes.
- We recommend to use the BOMAG filling and filtering unit with fine filter to fill the system. This ensures finest filtration of the hydraulic oil, prolongs the lifetime of the hydraulic oil filter and protects the hydraulic system.
- Clean fittings, filler covers and the area around such parts before disassembly to avoid entering of dirt.
- Do not leave the tank opening unnecessarily open, but cover it so that nothing can fall in.

6.2 Fuels and lubricants

Engine oil

Quality

Lubrication oils are classified according to their performance and quality class. Oils according to other comparable specifications may be used.

If low sulphur fuel (< 0.05%) is used, you must only use engine oils of API[1]-classification CF, CF-4, CG-4, CH-4 and CI-4.

For operation of an engine with high sulphur fuels it is recommended to use an engine oil of classification CF or higher with a total base number of at least 10.

⚠ Caution

Engine oils of classification CJ-4 must not be used!

Oil viscosity

Since lubrication oil changes its viscosity with the temperature, the ambient temperature at the operating location of the engine is of utmost importance when choosing the viscosity class (SAE-class) .

Optimal operating conditions can be achieved by using the following oil viscosity chart as a reference.

Ambient temperature	Viscosity
over 25 °C!	SAE 30 SAE10W-30 SAE 15W-40
0°C to 25°C	SAE 20 SAE10W-30 SAE 15W-40
below 0 °C	SAE 10 SAE10W-30 SAE 15W-40

Oil change intervals

The longest permissible time a lubrication oil should remain in an engine is 1 year. If the follow-

1 American Petroleum Institute

ing oil change intervals are not reached over a period of 1 year, the oil change should be performed at least once per year, irrespective of the operating hours reached.

API: CF, CF-4, CG-4,CH-4 and CI-4 = 250 operating hours

Fuels

Quality

Cetan index number: The recommended minimum index number for the Cetan value is 45. A Cetan index number higher than 50 should preferably be used, especially at ambient temperatures below -20 °C and when working at altitudes of 1500 m and more.

Diesel fuel specifications: With respect to the percentage (ppm) of sulphur the fuel used in the engine must comply with all relevant exhaust emission regulations in the are of use of the engine.

It is highly recommended to use a fuel with a sulphur content of less than 0,10 % (1000 ppm).

When using a diesel fuel with a high sulphur content of 0.50 % (5000 ppm) to 1.0 % (10.000 ppm), the engine oil change intervals must behalved.

⚠ Caution

Do not use any fuels with a sulphur content of more than 1,0 % (10000 ppm).

It is recommended to use diesel fuel that complies with the specifications EN590 or ASTM D975.

Diesel fuel with the designation no. 2-D is a destillate fuel with low volatility, which is especially suitable for industrial engines and heavy-duty commercial vehicles (SAE J313 JUN87).

Since KUBOTA diesel engines with a rated power of less than 56 kW (75 HP) comply with the exhaust emission standard of EPA[1]-stage 4, the use of low or ultra-low sulphur fuel is mandatory for these engines, if the engines are operated within the validity area of the EPA standard. As an alternative to no. 2-D you may also use diesel fuel no. 2-D S500 or S15; with ambient temperatures below -10 °C the diesel fuel no. 1-D S500 or S15 should be used fir no. 1-D.

1 United States Environmental Protection Agency

The fuel level should always be topped up in due time so that the fuel tank is never run dry, as otherwise filter and injection lines need to be bled.

Winter fuel

⚠ Danger

Fire hazard!

Diesel fuels must never be mixed with gasoline.

For winter operation use only winter diesel fuel, to avoid clogging because of paraffin separation. At very low temperatures disturbing paraffin separation can also be expected when using winter diesel fuel.

Coolant

Always use a mixture of anti-freeze agent and clean, dehardened water with a mixing ratio of 1:1.

Under particularly extreme temperature conditions you should consult the service representation of the engine manufacturer with respect to the anti-freeze agent to be used.

There are various types of anti-freeze agents available. For this engine you should use ethylene glycol.

Before filling in the coolant mixed with anti-freeze agent the radiator must be flushed with clean water. This procedure should be repeated two to three times to clean the inside of radiator and engine block.

Mixing the anti-freeze agent: Prepare a mixture of 50 % anti-freeze agent and 50 % low mineral, clean water. Stirr well before filling it into the radiator. The method for mixing water and anti-freeze agent depends on the brand of the anti-freeze agent. In this respect see standard SAE J1034 and also the standard SAE J814c.

Add anti-freeze agent: If the coolant level drops because of evaporation,only clean water is to be used for topping up. In case of leakages you must always fill in anti-freeze agents of the same brand and the same mixing ratio.

⚠ Caution

Do not mix different coolants and additives of any other kind.

Do not use any radiator cleaning agent after the anti-freeze agent has been mixed in. The anti-freeze agent also contains a corrosion protection agent. If this mixes with cleaning agent it may cause the development of sludge, which could damage the cooling system.

Anti-freeze concentration

50% = -37 °C

Environment

Coolant must be disposed of environmentally.

Mineral oil based hydraulic oil

The hydraulic system is operated with hydraulic oil HV 46 (ISO) with a kinematic Viskosität von 46 mm^2/s bei 40 °C und 8 mm^2/s bei 100 °C betrieben. For topping up or for oil changes use only high-quality hydraulic oil, type HVLP according to DIN 51524, part 3, or hydraulic oils type HV according to ISO 6743/3. The viscosity index (VI) should be at least 150 (observe information of manufacturer).

Bio-degradable hydraulic oil

The hydraulic system can also be operated with a synthetic ester based biodegradable hydraulic oil.

The biologically quickly degradable hydraulic oil Panolin HLP Synth.46 meets all demands of a mineral oil based hydraulic oil according to DIN 51524.

In hydraulic systems filled with Panolin HLP Synth.46 always use the same oil to top up.

When changing from mineral oil based hydraulic oil to an ester based biologically degradable oil, you should consult the lubrication oil service of the oil manufacturer for details.

Caution

Check the filter more frequently after this change.

Perform regular oil analyses for content of water and mineral oil.

Replace the hydraulic oil filter element every 500 operating hours.

6.3 Table of fuels and lubricants

Assembly	Fuel or lubricant		Quantity
	Summer	**Winter**	**Attention** Observe the level marks
Engine			
- Engine oil	Engine oil API: CF, CF-4, CG-4, CH-4 or CI-4		approx. 6.5 litres
	SAE 10W-40 (-20 °C to +40 °C) (BOMAG PN 009 920 06; 20 l)		
	SAE 10W-30 (-15 °C to +30 °C)		
	SAE 15W-40 (-15 °C to + 40 °C)		
	SAE 30 (+5 °C to +30 °C)	SAE 10 (-30 °C to -5 °C)	
- Fuel	Diesel	Winter diesel fuel (down to -12°C)	approx. 40 litres
- Coolant	Mixture of water and anti-freeze agent (BOMAG PN 009 940 08; 20 l)		approx. 4 litres
Hydraulic system	Hydraulic oil (ISO), HLP 46 (BOMAG PN 009 930 09; 20 l) or ester based biodegradable hydraulic oil		approx. 28 litres
Sprinkler system	Water	Anti-freeze mixture water [1]	approx. 220 litres
- Rubber tire sprinkler system	Emulsion		approx.20 l

1 Mix water and anti-freeze agent by following the instructions of the manufacturer.

duma rent www.duma-rent.com

6.4 Running-in instructions

The following maintenance work must be performed when running in new machines or overhauled engines:

⚠ Caution

Up to approx. 250 operating hours check the engine oil level twice every day.

Depending on the load the engine is subjected to, the oil consumption will drop to the normal level after approx. 100 to 250 operating hours.

Maintenance after 50 operating hours

- Change engine oil and filter
- Check the engine for leaks
- Retighten the fastening screws on air filter, exhaust and other attachments.
- Check screw connections on the machine, retighten as necessary.

6.5 Maintenance table

No.	Maintenance work	Comment	every 10 operating hours, daily	every 50 operating hours	every 250 oper. hours	every 500 oper. hours	every 1000 oper. hours	every 2000 oper. hours	every 3000 oper. hours	as required
6.6	Check the engine oil level	Dipstick mark	X							
6.7	Check the fuel level	Instrument cluster	X							
6.8	Check the hydraulic oil level	Dipstick mark	X							
6.9	Check the hydraulic oil filter element	Contamination indicator	X							
6.10	Check the coolant level		X							
6.11	Check the water separator		X							
6.12	Check the water level	Water level gauge	X							
6.13	Check the emulsion level	only AC-machines	X							
6.14	Check the chip spreader and clean the spreading beam		X							
6.15	Check fuel lines and clamps			X						
6.16	Service the chip spreader			X						
6.17	Change engine oil and oil filter[1]	at least 1x per year see foot note			X					
6.18	Check, clean, replace the combustion air filter	replace min. 1x per year			X					
6.19	Check the air intake lines				X					
6.20	Cleaning radiator and hydraulic oil cooler				X					
6.21	Check, tension, replace the V-belt				X					
6.22	Check radiator hoses and hose clamps				X					
6.23	Checking, adjusting the scrapers				X					

No.	Maintenance work	Comment	every 10 operating hours, daily	every 50 operating hours	every 250 oper. hours	every 500 oper. hours	every 1000 oper. hours	every 2000 oper. hours	every 3000 oper. hours	as required
6.24	Battery service	pole grease				X				
6.25	Change the fuel filter					X				
6.26	Drain the fuel tank sludge					X				
6.27	Check and adjust the valve clearance	Intake and exhaust valve: 0.20 mm on cold engine					X			
6.28	Check the engine mounts						X			
6.29	Change hydraulic oil and breather filter[2]	at least every 2 years						X		
6.30	Change the hydraulic oil filter[2]	at least every 2 years						X		
6.31	Change the coolant	at least every 2 years						X		
6.32	Replacing the fuel lines	at least every 2 years						X		
6.33	Check the injection valves							X		
6.34	Check the fuel injection pump								X	
6.35	Check the tire pressure	only AC-machines								X
6.36	Clean the water sprinkler system									X
6.37	Drain the water sprinkler system, maintenance in case of frost									X
6.38	Fill the provision tank for the windscreen washer system									X
6.39	Tightening torques									X
6.40	Engine conservation									X

1 oil change after 50 and 250 operating hours, then every 250 operating hours
2 Also after repairs in the hydraulic system.

Maintenance

duma rent www.duma-rent.com

6.6 Check the engine oil level

⚠ Caution

The machine must be in horizontal position. When the engine is warm, shut it down and check the oil level after five minutes. With a cold engine the oil level can be checked immediately.

For quality and quantity of oil refer to the "table of fuels and lubricants".

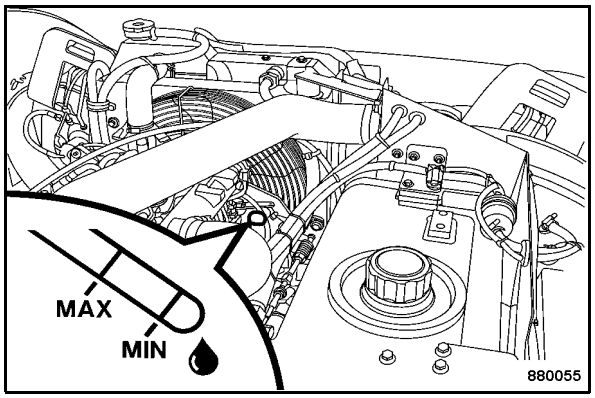

Fig. 119

- Pull the dipstick (Fig. 119) out, wipe it off with a lint-free, clean cloth and reinsert it until it bottoms.
- Pull the dipstick back out.

The oil level must always be between the "MIN"- and "MAX"-marks.

- If the oil level is too low top up oil immediately.
- If the oil level is too high, determine the cause and drain the oil off.

6.7 Checking the fuel level

⚠ Caution

Do not drive the fuel tank dry, as otherwise the fuel system needs to be bled.

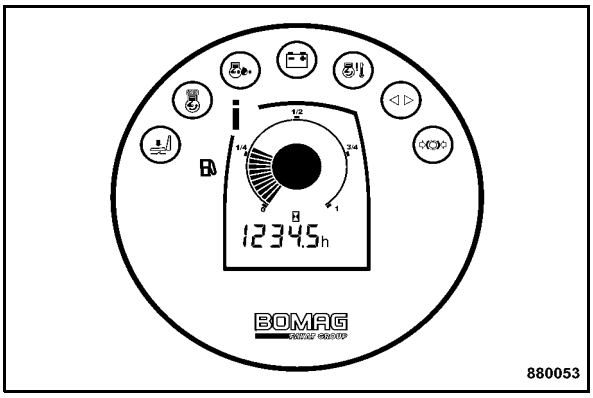

Fig. 120

- Check the fuel level on fuel gauge (i) (Fig. 120) in the instrument cluster.

Refuelling

⚠ Danger

Fire hazard!

When working on the fuel system do not use open fire, do not smoke, do not spill any fuel.

Do not refuel in closed rooms.

Shut down the engine.

⚠ Danger

Health hazard!

Do not inhale any fuel fumes.

⚠ Caution

Contaminated fuel can cause malfunction or even damage of the engine. If necessary, fill in fuel through a funnel with screen.

Monitor the entire refuelling process.

For quality and quantity of fuel refer to the "table of fuels and lubricants".

Every 10 operating hours

Environment

Catch running out fuel, do not let it seep into the ground.

- Shut down the engine.

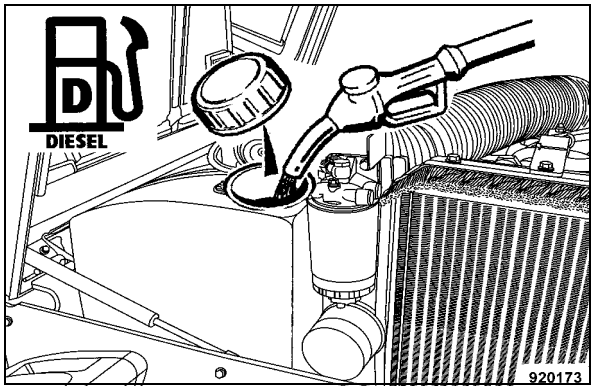

Fig. 121

- Clean the area around the filler opening.
- Open the fuel tank cover (Fig. 121).
- Top up with fuel (diesel or winter diesel).
- Screw the fuel tank cover back on.

6.8 Check the hydraulic oil level

Caution

If, during the daily inspection of the oil level the hydraulic oil level is found to have dropped, check all lines, hoses and components for leaks.

In hydraulic systems filled with Panolin HLP Synth. 46 always use the same oil to top up. With other ester based oils consult the lubrication oil service of the respective oil manufacturer.

- Clean the area around the filler opening.
- Remove the filler cap.

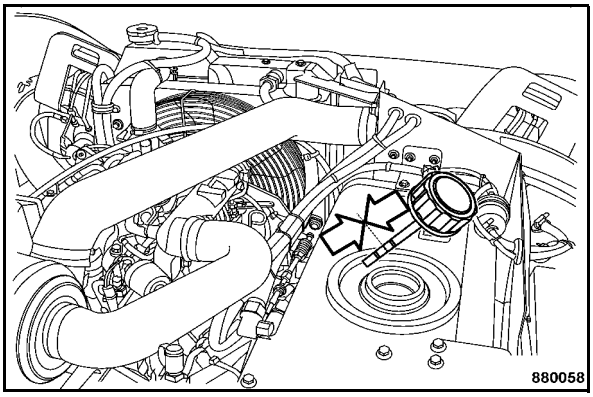

Fig. 122

- Check the oil level on the dipstick. The oil level must be between the "MIN" and "MAX" marks (Fig. 122).
- If the oil level is too low top up hydraulic oil immediately.

For quality and quantity of oil refer to the ”table of fuels and lubricants”.

duma rent www.duma-rent.com

6.9 Checking the hydraulic oil filter element

i Note

If the hydraulic oil is very cold the pin may pop up, you should therefore only check the filter and press the pin in at operating temperature.

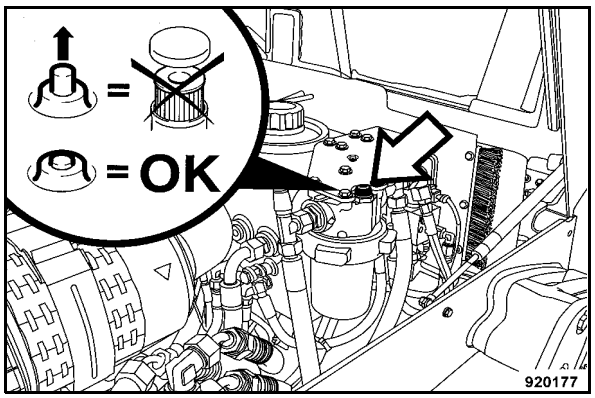

Fig. 123

- Check the service indicator 1 (Fig. 123) at operating temperature and with the engine running at maximum speed.
- If necessary press the pin in.

Pin remains pressed in	=	Hydraulic oil filter element o.k.
Pin pops out	=	Replace the hydraulic oil filter element

6.10 Check the coolant level

⚠ Danger

Danger of scalding!

Open the cap on the coolant compensation tank only when the engine is cold.

⚠ Caution

If, during the daily inspection the coolant level is found to have dropped, check all lines, hoses and engine for leaks.

For quality of coolant refer to "fuels and lubricants".

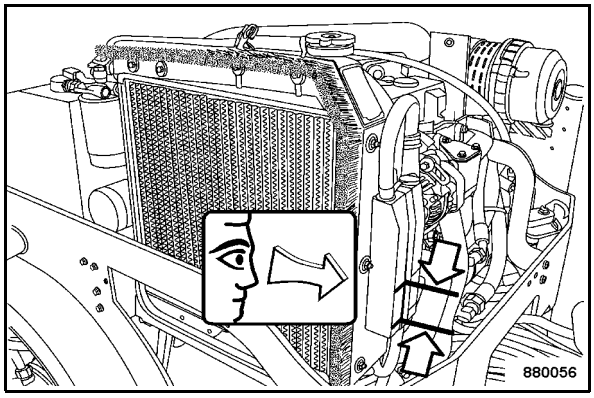

Fig. 124

- Check the coolant level in the compensation tank (Fig. 124).
- To top up unscrew the filler cap and fill in coolant up to the MAX-mark.

Every 10 operating hours

6.11 Check the water separator

Danger

Fire hazard!

When working on the fuel system do not use open fire, do not smoke.

Do not spill any fuel.

Shut down the engine.

Danger

Health hazard!

Do not inhale any fuel fumes.

Note

The service intervals for the water separator depend on the water content in the fuel and can therefore not be determined precisely. After taking the engine into operation you should therefore check the water separator every day for signs of water.

Environment

Any fuel must be caught and disposed of in an environmentally friendly manner.

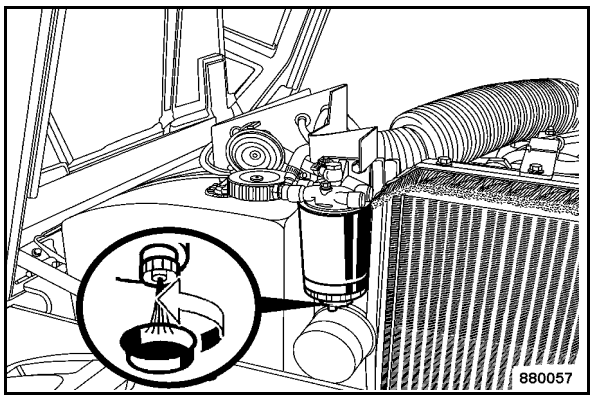

Fig. 125

- Slacken the drain plug (Fig. 125) for a few turns and catch running out fuel / water.
- Tighten the drain plug again and check for leaks, if necessary replace the seal ring.

6.12 Checking the water level

Caution

If there is a risk of frost observe the special service instructions in chapter "water sprinkler system, maintenance in case of frost".

Make sure that the ventilation bore in the filler cap is free.

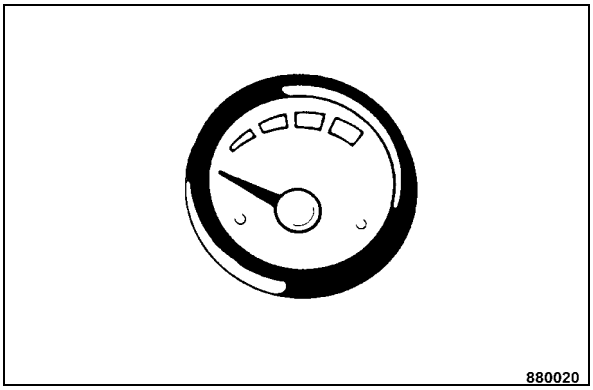

Fig. 126

- Check the water tank filling level on the water level gauge (Fig. 126).

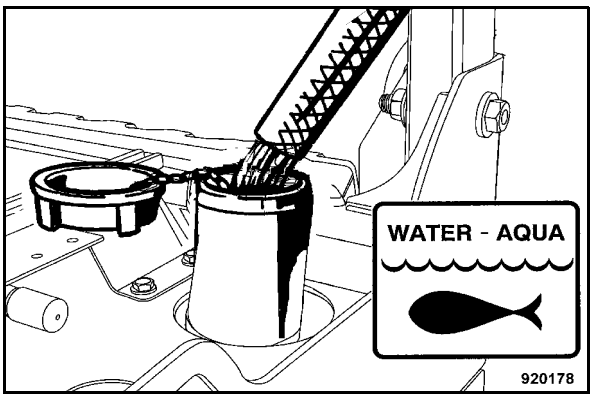

Fig. 127

- Open the cap (Fig. 127) and check the water level.
- If necessary fill in water through the filler screen and close the cap again.

duma rent www.duma-rent.com

6.13 Checking the emulsion level[1]

⚠ Caution

Different emulsions must not be mixed. If necessary drain off the emulsion beforehand.

For mixing ratio of water and emulsion refer to the specification of the respective manufacturer.

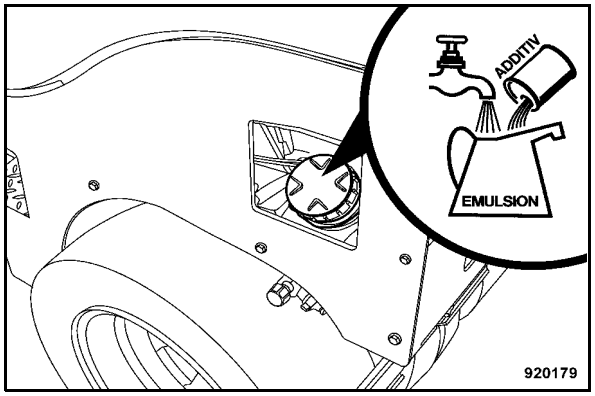

Fig. 128

- Unscrew the cover (Fig. 128) and check the emulsion level, fill up if necessary.

⚠ Caution

Make sure that the ventilation bore in the filler cap is free.

1 only AC-machine

6.14 Checking the chip spreader[2] and cleaning the spreading beam

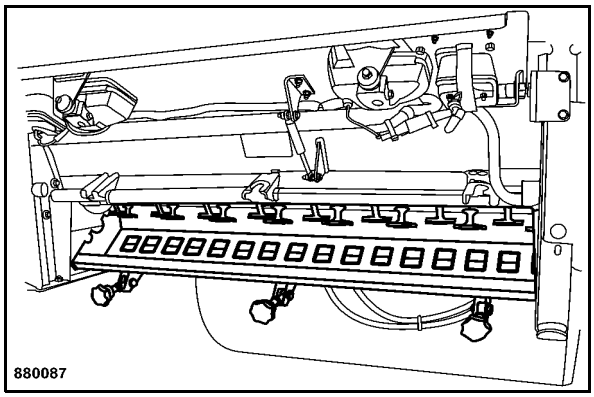

Fig. 129

- Clean the spreading beam from any dirt (Fig. 129), especially from asphalt.

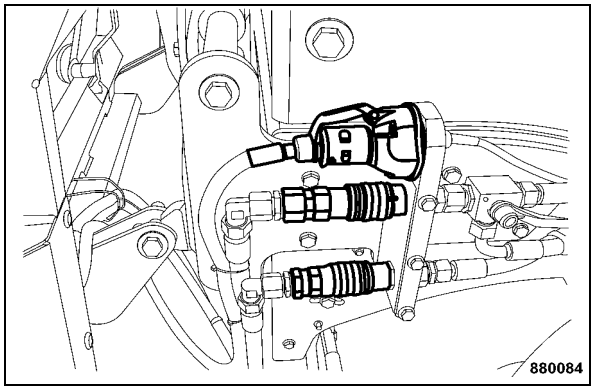

Fig. 130

- Check hydraulic lines (Fig. 130) for leak tightness.
- Check hydraulic and electric connections for tight fit.

2 Optional equipment

Every 10 operating hours

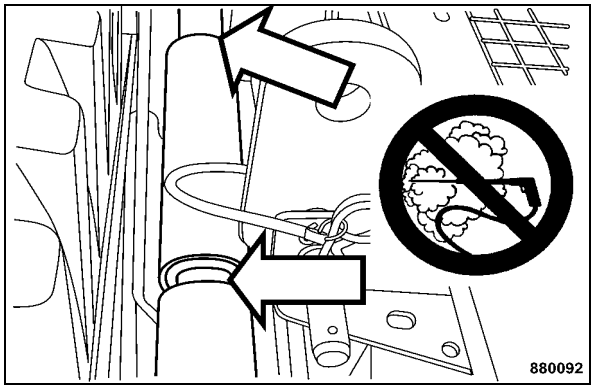

Fig. 131

⚠ Caution

When cleaning with a steam cleaner do not direct the water jet into the sealing elements of the slide profiles (Fig. 131).

duma rent www.duma-rent.com

6.15 Checking fuel lines and clamps

Danger

Danger of burning!

Perform inspection work only after the engine has cooled down and with the engine stopped.

Caution

If fuel lines or hose clamps are found to be damaged, the corresponding parts must be immediately repaired or replaced.

After replacing lines or hose clamps the fuel system needs to be bled.

Disassembled or new fuel lines must be closed with clean cloths on both ends, to make sure that no dirt will enter into the fuel system. Dirt particles can destroy the injection pump.

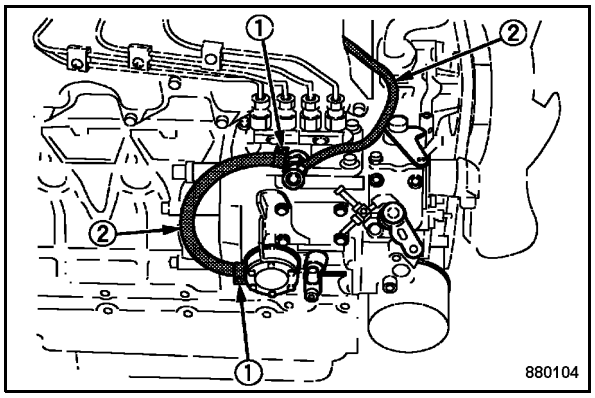

Fig. 132

- Check the condition and tight fit of all fuel lines (2) (Fig. 132) and hose clamps (1).

6.16 Servicing the chip spreader[1]

Lubricate the following components on the chip spreader:

- Spreading shaft bearings
- Drive chain
- Adjustment lever for chip quantity
- Screw connections with star handles
- all movable parts

1 Optional equipment

Every 50 operating hours

duma rent www.duma-rent.com

6.17 Changing engine oil and oil filter

Danger

Danger of scalding!

When draining off hot oil.

By hot oil when unscrewing the engine oil filter.

Caution

The oil change at 250 operating hours refers to the use of oils of oil quality class API CF, CF-4, CG-4, CH-4 or CI-4 and a fuel sulphur content of less than 0.5%.

When using fuels with a sulphur content higher than 0.5% the oil change intervals must be halved.

Drain the engine oil only when the engine is warm.

For quality and quantity of oil refer to the "table of fuels and lubricants".

Environment

Catch running out oil and dispose of environmentally together with the oil filter cartridge.

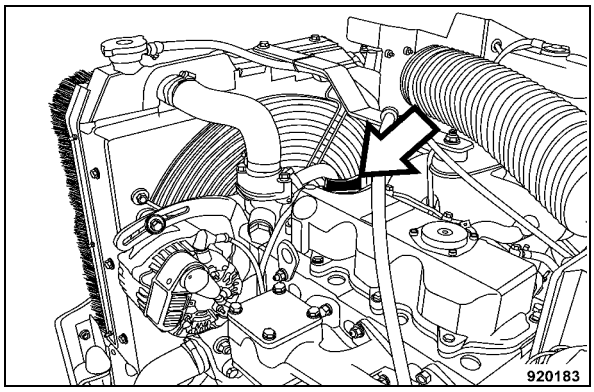

Fig. 133

- Unscrew the oil filler plug (Fig. 133).

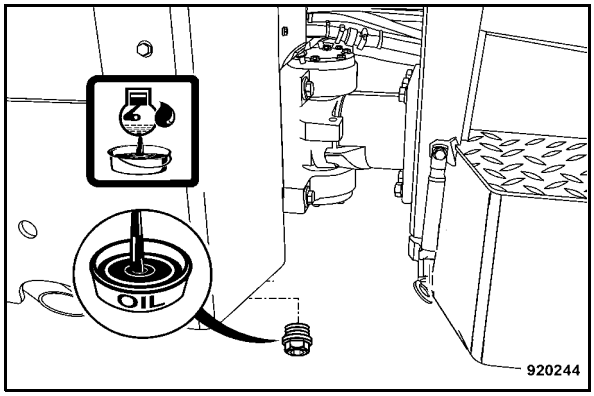

Fig. 134

- Unscrew the drain plug (Fig. 134) and catch running out oil.
- Turn the drain plug tightly back in.

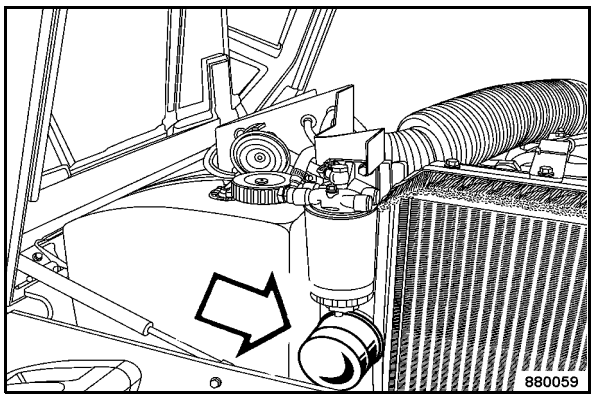

Fig. 135

- Unscrew the filter cartridge (Fig. 135) using an appropriate filter wrench.
- Clean the sealing face on the filter carrier from any dirt.

Every 250 operating hours

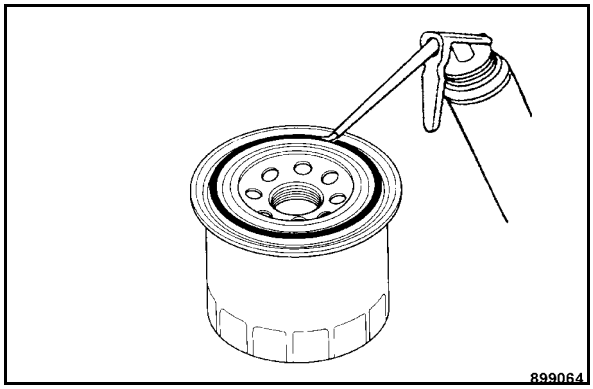

Fig. 136

- Slightly oil the rubber seal on the new filter cartridge (Fig. 136).
- Turn the new filter cartridge on by hand, until the seal contacts.
- Tighten the filter element for another half turn.

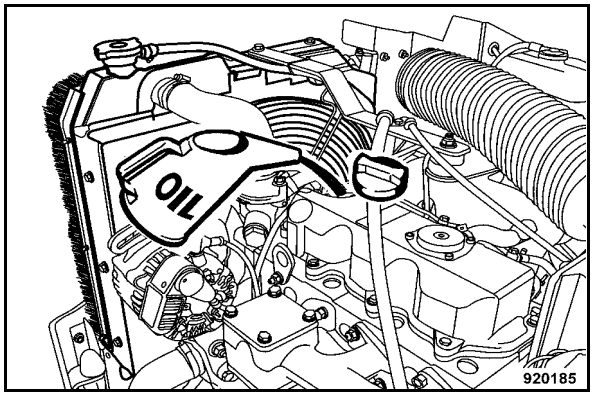

Fig. 137

- Fill in new engine oil (Fig. 137).
- Tighten the oil filler cap properly.

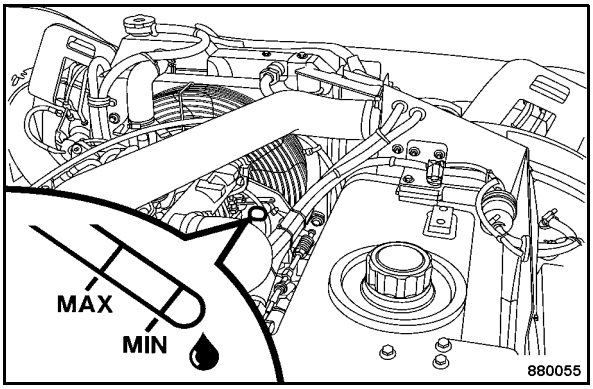

Fig. 138

- After a short test run check the oil level once again (Fig. 138), if necessary top up to the top mark (MAX).

duma rent www.duma-rent.com

6.18 Checking, cleaning, replacing the combustion air filter

⚠ Caution

Perform cleaning, maintenance and repair work only with the engine shut down. Do not start the engine after removing the filter element.

Do not use gasoline or hot fluids to clean the filter element.

After cleaning the filter element must be inspected for damage using a torch.

Air filter elements with damaged paper bellows or seal lips must be replaced in any case.

The main filter element must be replaced after 6 times cleaning, but at the latest after one year, irrespective of the operating hours.

Each cleaning interval must be marked with a cross on the cover of the filter element.

Cleaning does not make sense if the air filter element is covered with a sooty deposit. Use a new filter element.

Incorrectly handled filter elements may become ineffective because of damage (e.g.: cracks) and cause engine damage.

- Open the engine hood.

i Note

Under very dusty conditions you may have to check the filter service indicator every day.

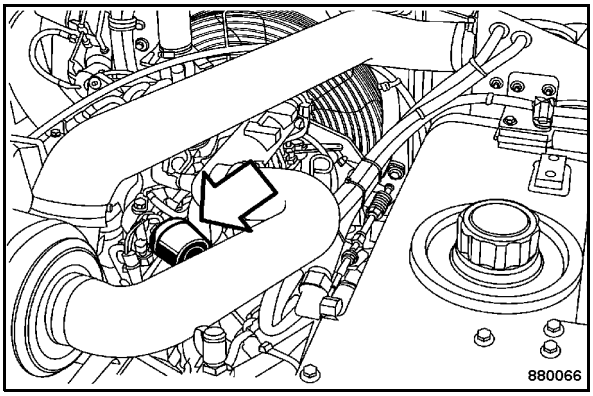

Fig. 139

Service of the dry air filter is due when the red piston of the filter service indicator (Fig. 139) reaches into the transparent window.

⚠ Caution

After cleaning the air filter press the reset button for the red piston on the filter service indicator.

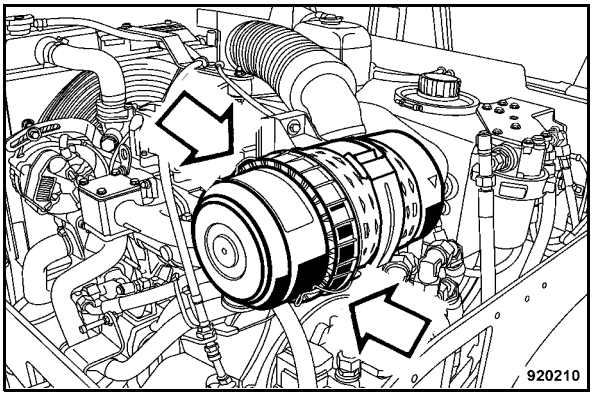

Fig. 140

- Release the locking hook (Fig. 140) and take the filter hood off.
- Clean filter hood and dust discharge valve.

Every 250 operating hours

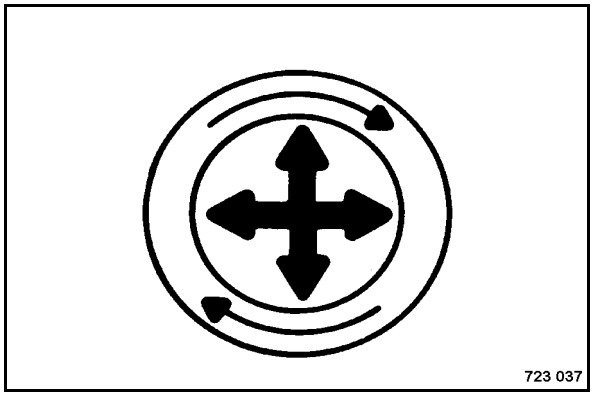

Fig. 141

- Carefully loosen the main filter element (Fig. 141).

The main filter element is located directly on the air intake tube, thereby providing a seal on the inside of the filter cover. Carefully remove the main filter element, in order to reduce the released amount of dust. To release the seal pull the main filter element carefully up, down and sideways or turn it (Fig. 141) .

⚠ Caution

Avoid contact between main filter element and housing.

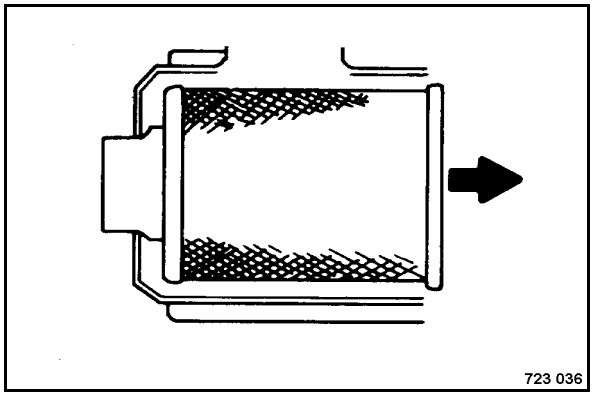

Fig. 142

- Pull the main filter element (Fig. 142) carefully out of the housing.

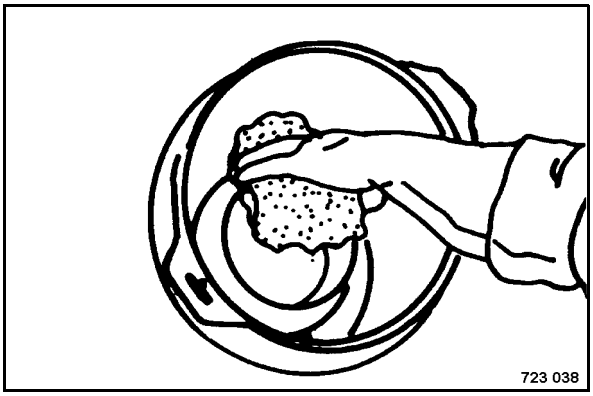

Fig. 143

- Clean the sealing face on the outlet tube (Fig. 143).

Dust on the outer diameter of the outlet tube can impair effective sealing.

- Check the old main filter element.

The old main filter element can be of help to discover foreign particles on the sealing face, which could lead to leaks. A dust strip on the clean air side of the filter may be a sign for this Eliminate this problem before installing a new main filter element.

- If the main filter element is damaged, the safety element must be replaced as well.
- Clean or replace the main filter element.

i Note

We generally recommend to change the filter. A new filter element is far less expensive than a possible engine damage.

- Examine the main filter element thoroughly for damage.

Before installing the new main filter element check it for possible damage from transport, cleaning or incorrect handling. Especially on the inside of the open end (sealing area). Do not install damaged filter elements.

- If necessary use safety elements.

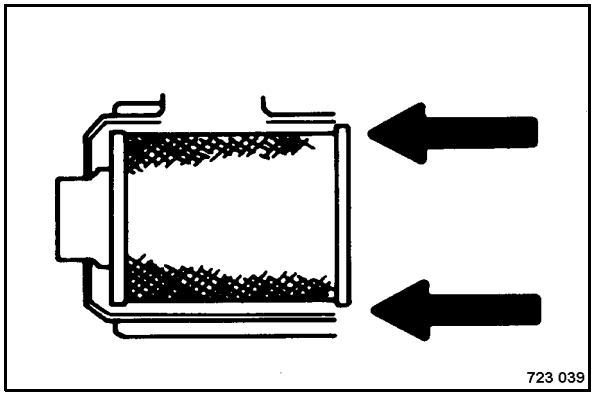

Fig. 144

- Insert the main filter element (Fig. 144).

The radial sealing area is located at the inside of the open filter edge. This critical sealing area must be under slight tension after the filter has been installed. In order to achieve a tight seal apply pressure to the outer edge of the filter and not to the moveable centre.

- Reinstall the filter hood with the dust discharge valve.

⚠ Caution

The dust discharge valve must point vertically downwards.

Dry cleaning of the main filter element

⚠ Danger

Eye injury!

Wear protective clothing (goggles, gloves).

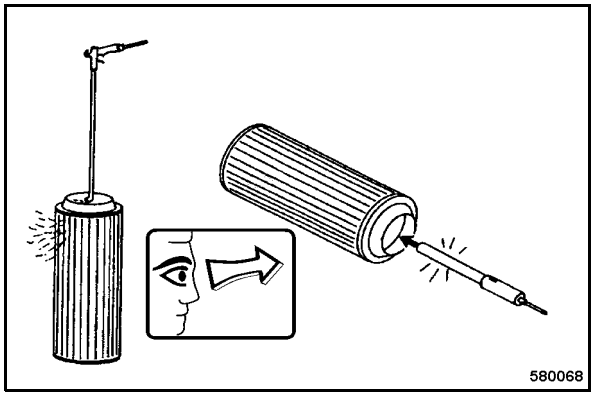

Fig. 145

i Note

For cleaning purposes fit a tube to the compressed air gun (Fig. 145), the end of which should be bent for approx. 90°.

The length should reach down to the bottom of the element.

- Blow the main filter element out with compressed air (max. 2.1 bar) from inside to outside by moving the tube up and down inside the element, until it if free of dust.
- Examine the main filter element with a torch for cracks and holes in the paper bellows.

⚠ Caution

Do not continue to use a damaged main filter element. If in doubt use a new main filter element.

Every 250 operating hours

Changing the safety filter element

⚠ Caution

The safety filter element must not be cleaned and should not be used again after it has been removed.

The safety filter element must be replaced:

if the main filter element is defective,

after 6 times cleaning of the main filter element,

at the latest after 2 years,

if the red piston of the filter service indicator is visible again after completion of the service work.

- Remove the housing cover and pull the main filter element off.

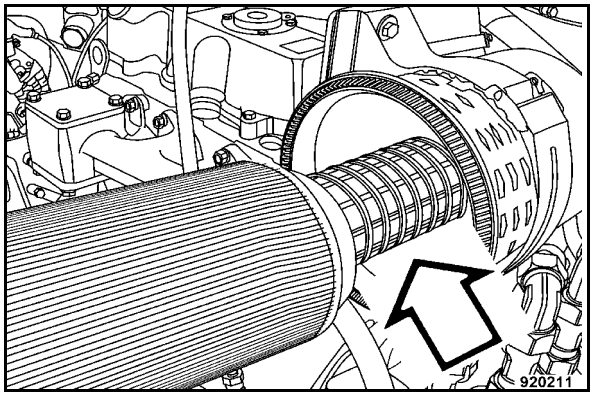

Fig. 146

- Pull the safety element (Fig. 146) out by turning it lightly.
- Push in a new safety filter element.
- Reassemble main filter element and cover.

6.19 Check the air intake lines

⚠ Danger

Danger of burning!

Perform inspection work only after the engine has cooled down and with the engine stopped.

⚠ Caution

Take care that no contaminants enter into the air intake system, since this could damage the engine!

If an air intake hose is damaged, both hose and hose clamp must be replaced immediately.

- Check the condition and tight fit of all air intake lines and hose clamps.

duma rent www.duma-rent.com

6.20 Cleaning radiator and hydraulic oil cooler

⚠ Danger

Danger of injury!

Perform cleaning work only with engine stopped and cooled down!

⚠ Caution

Dirty operating conditions, particularly lubrication oil and fuel deposits on the cooling fins of the engine and the engine oil cooler have an adverse effect on the cooling of the engine. You should therefore immediately seal any oil or fuel leaks near cooling fan, cylinder or engine oil cooler and subsequently clean the cooling fins.

Cleaning with compressed air

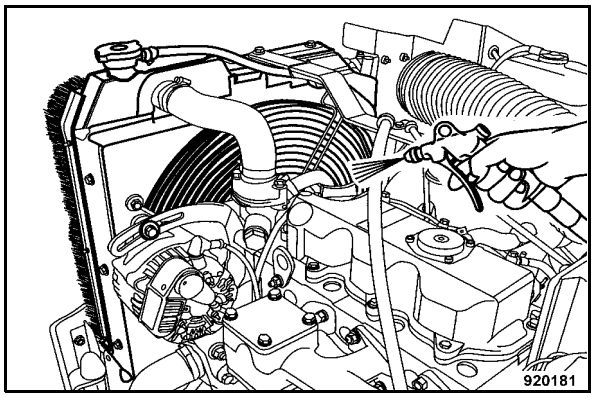

Fig. 147

- Blow the cooling air passages out with compressed air from the air discharge side (Fig. 147).

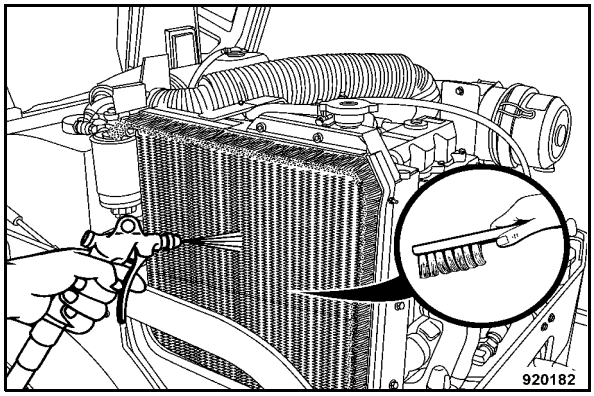

Fig. 148

- Blow out the air supply side of the hydraulic oil cooler (Fig. 148).

Cleaning with cold cleansing agent

⚠ Caution

Protect electrical equipment such as generator, regulator and starter against the direct water jet.

- In case of oily dirt spray engine and cooler with a suitable cleansing agent, e.g. cold cleanser, let it soak in for a while and spray it off with a strong water jet.
- Run the engine warm for a while to avoid corrosion.

Every 250 operating hours

6.21 Checking, tensioning, replacing the V-belt

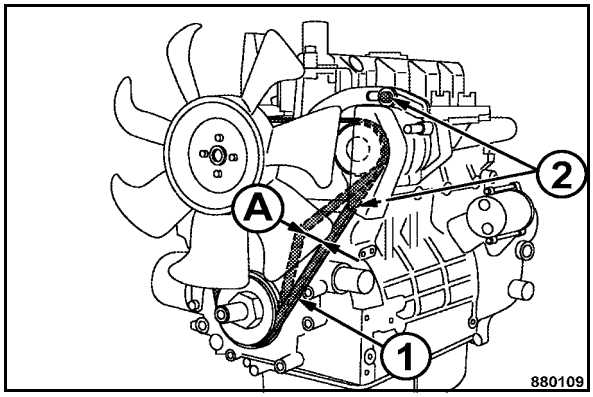

Fig. 149

Checking the V-belt

- Inspect the entire circumference of the V-belt (1) (Fig. 149) visually for damage and cracks.
- Replace a damaged or cracked V-belt immediately.
- Check with thumb pressure whether the V-belt can be depressed more than 7 to 9 mm (A) between the V-belt pulleys, retighten if necessary.

Tightening the V-belt

- Slightly slacken the fastening screws (2) .
- Press the generator in direction outward using a lever, until the correct V-belt tension is reached.
- Retighten all fastening screws and check the V-belt tension once again.

Changing the V-belt

- Slightly slacken the fastening screws (2) .
- Press the generator completely against the engine.
- Remove the old V-belt.
- Fit the new V-belt to the V-belt pulleys.
- Tension the V-belt as previously described.

6.22 Checking radiator hoses and hose clamps

⚠ Danger

Danger of burning!

Perform inspection work only after the engine has cooled down and with the engine stopped.

⚠ Caution

If a radiator hose is swollen, hardened or cracked, both hose and hose clamp must be replaced immediately.

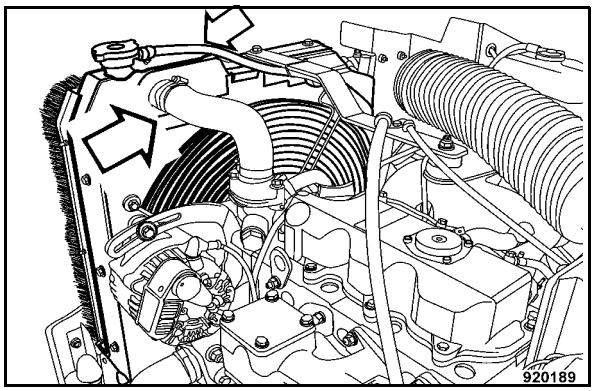

Fig. 150

- Check the conditon and tight fit of all readiator hoses and hose clamps (Fig. 150).

duma rent www.duma-rent.com

6.23 Checking, adjusting the scrapers

Drums

⚠ Caution

Scrapers (2 per drum) must be replaced when worn.

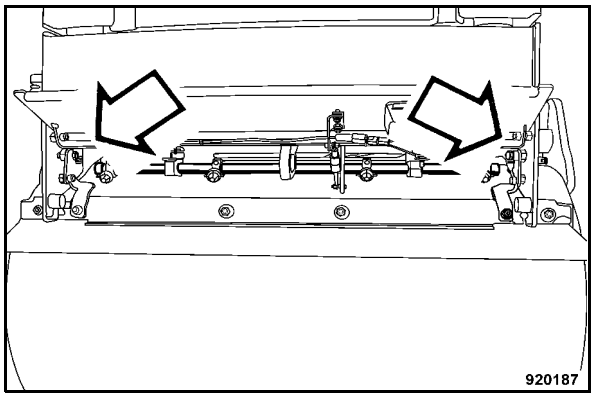

Fig. 151

- Open the flap, check the scrapers, replace if ncessary (Fig. 151).

Wheels (AC-machines)

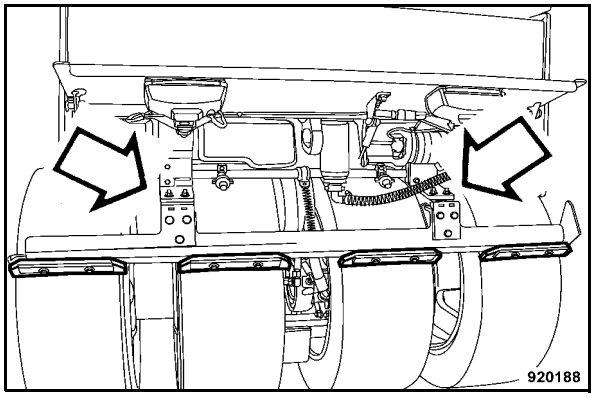

Fig. 152

- Open the rear flap, check the scrapers, replace if ncessary (Fig. 152).
- Adjust the scrapers with the screws to a uniform distance of approx. 2 mm from the rubber tires.

Every 250 operating hours

duma rent www.duma-rent.com

6.24 Battery service

Danger

Danger of cauterisation ! Danger of explosion!

When working on the battery do not use open fire, do not smoke!

The battery contains acid. Do not let acid come in contact with skin or clothes!

Wear protective clothing!

Do not lay any tools on the battery!

For recharging remove the plugs from the battery to avoid the accumulation of highly explosive gases.

Environment

Dispose of the old batteries environmentally.

Note

Maintenance free batteries also need care. Maintenance free only means that the fluid level does not need to be checked. Each battery suffers under self-discharge, which may, in not checked occasionally, even cause damage to the battery as a result of exhaustive discharge.

The following therefore applies for the service life:

- Switch off all consumers (e.g. ignition, light, inside light, radio).
- Check open-circuit voltage of the battery at regular intervals. At least once per month.

Reference values: 12.6 V = fully charged; 12.3 V = 50% discharged.

- Recharge the battery immediately after an open-circuit voltage of 12.25 V or less is reached. Do not perform quick charging.

The open-circuit voltage of the battery occurs approx. 10 hours after the last charging process or one hour after the last discharge.

- After each charging process allow the battery to rest for one hour before taking it into service.
- For resting periods of more than one month you should always disconnect the battery. Do not forget to perform regular open-circuit voltage measurements.

Caution

Exhausted batteries (batteries with formation of sulphate on the plates) are not covered under warranty!

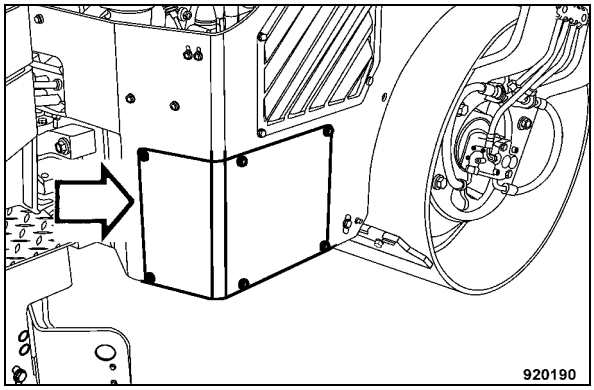

Fig. 153

- Disassemble the covering flap of the battery compartment (Fig. 153).

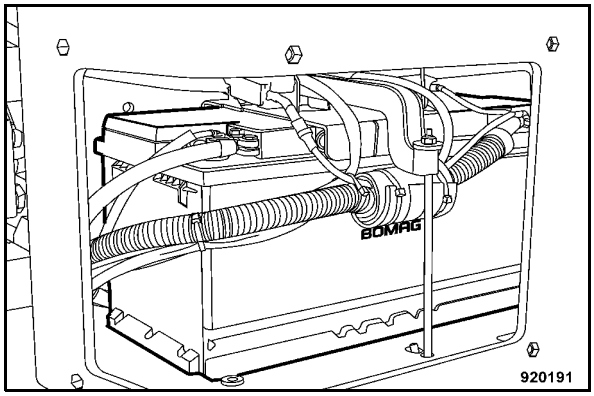

Fig. 154

- Clean battery and battery compartment (Fig. 154).
- Clean battery poles and pole clamps and grease them with pole grease (Vaseline).
- Retighten the pole clamps.
- Check the fastening of the battery.

Every 500 operating hours

6.25 Change the fuel filter

Danger

Fire hazard!

When working on the fuel system do not use open fire, do not smoke.

Do not spill any fuel.

Danger

Health hazard!

Do not inhale any fuel fumes.

Environment

Catch running out fuel, do not let it seep into the ground.

Dispose of the used fuel filter environmentally.

Changing the fuel pre-cleaner

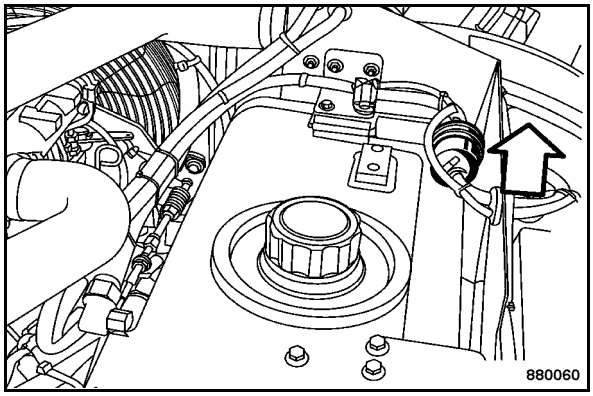

Fig. 155

- Loosen the hose clamps (Fig. 155).
- Pull the fuel filter out of the hoses.
- Install the new fuel pre-filter and observe the flow direction (arrow).
- Fasten the hose clamps.

Replacing the fuel filter cartridge

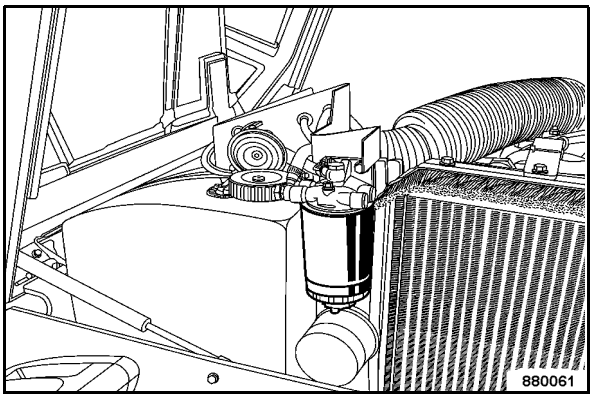

Fig. 156

- Slacken and unscrew the fuel filter cartridge (Fig. 156).
- Clean the sealing face on the filter carrier from any dirt.
- Apply a thin film of fuel to the seals and screw the new filter cartridge on hand-tight.

Bleeding of the fuel system

Danger

Fire hazard!

Do not bleed the engine while it is hot, running out fuel dripping on the hot exhaust can cause a fire.

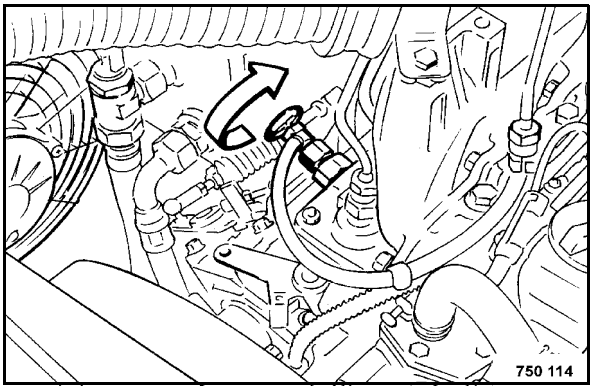

Fig. 157

- Open the bleeding screw (Fig. 157) on the top of the injection pump.

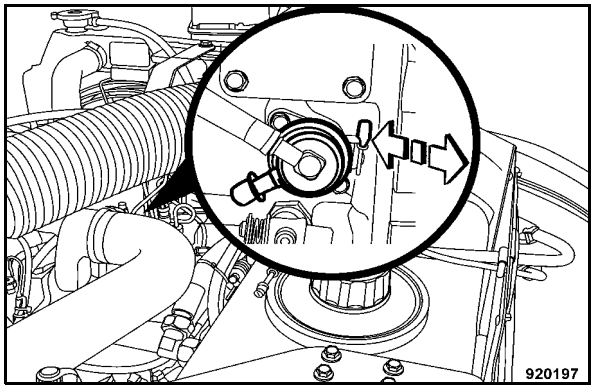

Fig. 158

- Operate the fuel lift pump (Fig. 158) until fuel runs out of the bleeding screw without air bubbles.
- Retighten the bleeding screw.

6.26 Drain the fuel tank sludge

Danger

Fire hazard!

When working on the fuel system do not use open fire, do not smoke.

Do not spill any fuel.

Danger

Health hazard!

Do not inhale any fuel fumes.

Environment

Catch running out fuel, do not let it seep into the ground.

Note

When performing this work the fuel tank shall only hold max. 5 litres of fuel, pump off if necessary.

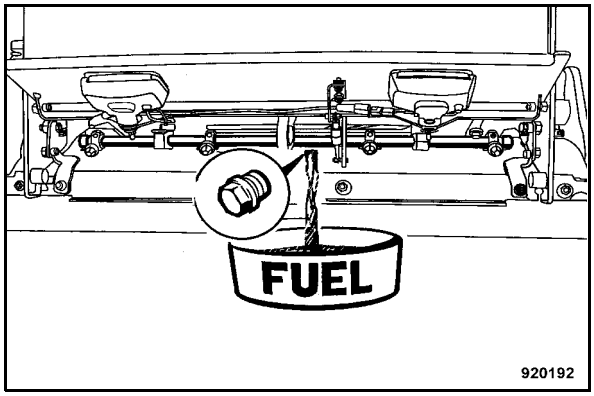

Fig. 159

- Unscrew the plug (Fig. 159) from underneath the fuel tank and let the fuel run out.
- Once all fuel has run out screw the oil drain plug back in with a new seal ring.

Every 500 operating hours

duma rent www.duma-rent.com

6.27 Checking, adjusting the valve clearance

⚠ Caution

We recommend to have this work carried out by trained personnel or our after sales service.

Check and adjust only when the engine is cold.

The first cylinder is the one nearest to the cooling fan side.

Valve clearance:

Intake and exhaust valve = 0.20 mm

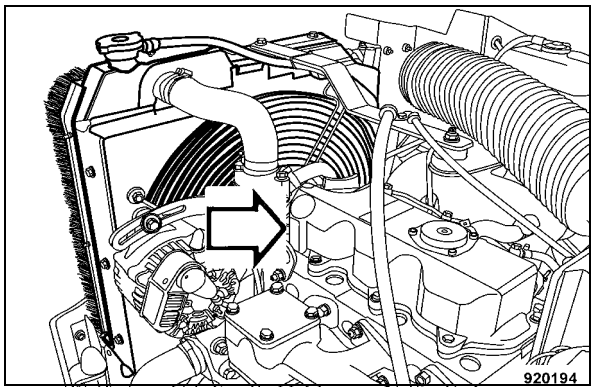

Fig. 160

- Remove the valve cover (Fig. 160).

Valve adjustment schematic

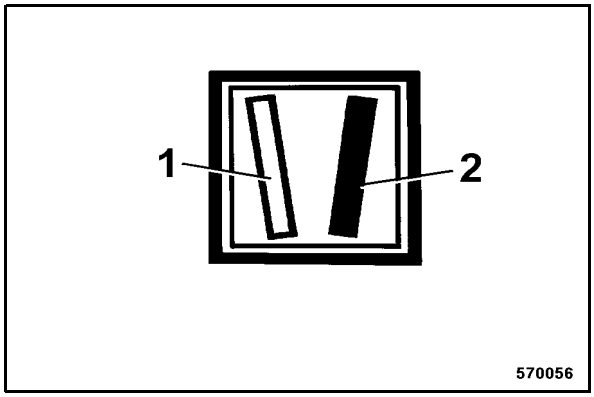

Fig. 161

Valve (1) (Fig. 161) white = not adjustable

Valve (2) black = adjustable

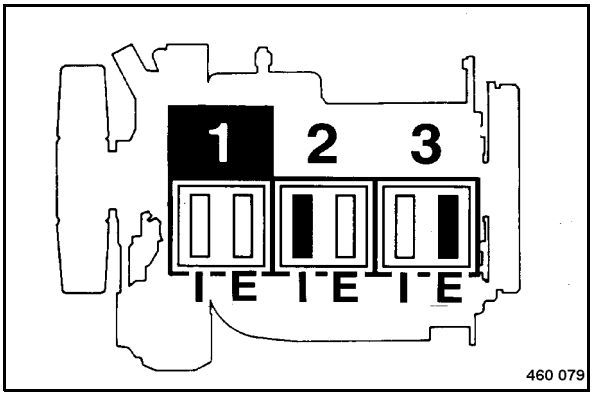

Fig. 162

Crankshaft position 1 (Fig. 162)

- Crank the engine with the starter or a spanner by the V-belt pulley until both valves on cylinder 1 are “overlapping”.

Overlapping means: Exhaust valve not yet closed, intake valve starts to open.

- Perform the adjustment of the valve by following the adjustment diagram "crankshaft position 1", black mark.
- For control purposes mark the respective rocker arm with while chalk once the corresponding valve is adjusted.

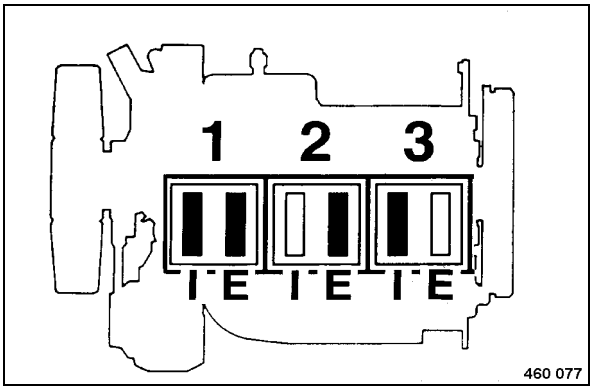

Fig. 163

Crankshaft position 2 (Fig. 163)

- Turn the crankshaft one revolution (360 °) further.
- Perform the adjustment of the valve by following the adjustment diagram "crankshaft position 2", black mark.

I = Intake valve

Every 1000 operating hours

E = Exhaust valve

- Check the black valves (Fig. 162) on cylinders 1, 2 and 3, adjust if necessary.

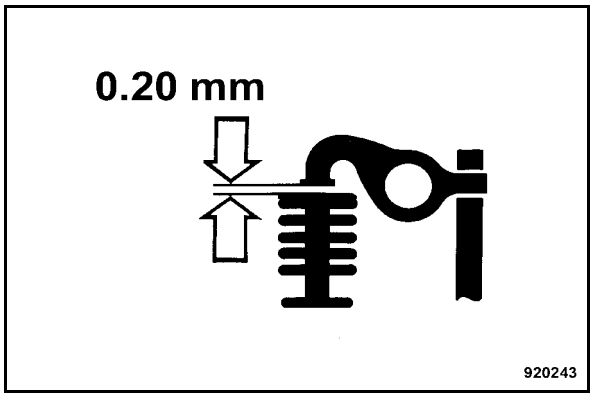

Fig. 164

- Check the gap between rocker arm and valve with a feeler gauge (Fig. 164).
- If the gap is too wide or too narrow for the feeler gauge, the valve clearance must be adjusted.

i Note

Mark checked and adjusted valves with chalk.

- Install the cylinder head cover with a new gasket.

i Note

After a short test run check the engine for leaks.

6.28 Check the engine mounts

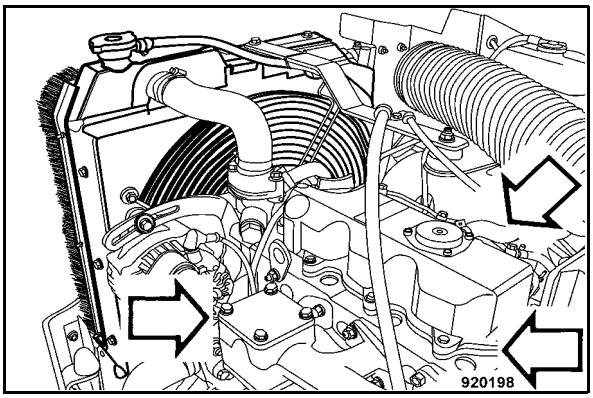

Fig. 165

- Check the fastening of intake and exhaust tubes (Fig. 165) on the cylinder heads for tight fit.
- Check sockets and clamps on the air filter for tight fit and leak tightness.
- Check fastening and tightness of the lubrication oil sump.

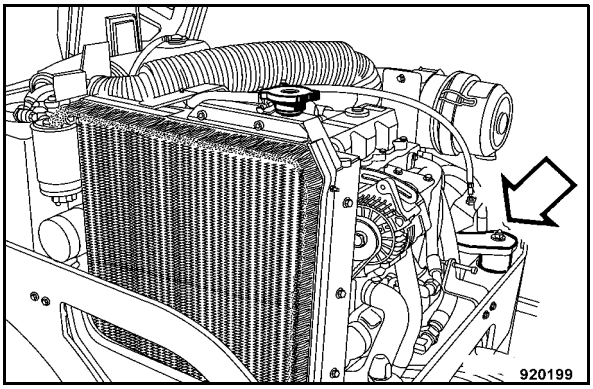

Fig. 166

- Check the condition and tight fit of the engine pillow blocks (Fig. 166).

duma rent www.duma-rent.com

6.29 Changing hydraulic oil and breather filter

i Note

See also the notes on the hydraulic system in the chapter "General notes on maintenance".

⚠ Danger

Danger of scalding!

When draining off hot hydraulic oil!

⚠ Caution

The hydraulic oil must also be changed after major repairs in the hydraulic system.

Perform the oil change when the hydraulic oil is warm.

Replace the hydraulic oil filter element with every hydraulic oil change.

Change the filter only after the hydraulic oil change and after the test run.

Clean the area round hydraulic oil tank, filler opening and breather filter.

Do not start the engine after draining the hydraulic oil.

Do not use any detergents to clean the system.

Use only lint-free cleaning cloths.

For quality and quantity of oil refer to the "table of fuels and lubricants".

When changing from mineral oil based hydraulic oil to an ester based biologically degradable oil, you should consult the lubrication oil service of the oil manufacturer for details.

Environment

Catch running out hydraulic oil and dispose of environmentally.

- Drive the machine, until the hydraulic oil has reached operating temperature.
- Shut down the engine.

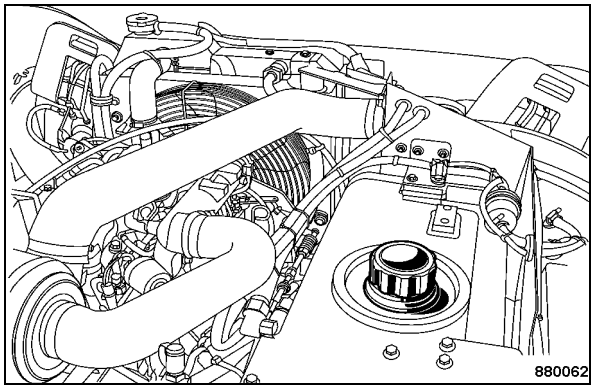

Fig. 167

- Remove the cap from the hydraulic oil tank (Fig. 167).

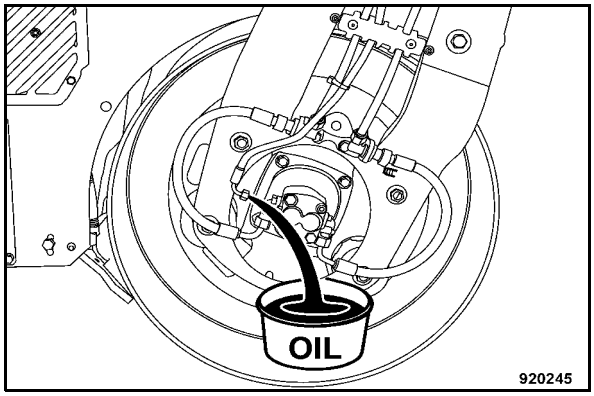

Fig. 168

- Disconnect bthe leak oil hose from the front right hand vibration motor (Fig. 168), drain off and catch all hydraulic oil.
- Reconnect the leak oil hose tightly.

i Note

We recommend to use the BOMAG filling and filtering unit with fine filter to fill the system. This ensures finest filtration of the hydraulic oil, prolongs the lifetime of the hydraulic oil filter and protects the hydraulic system.

Every 2000 operating hours

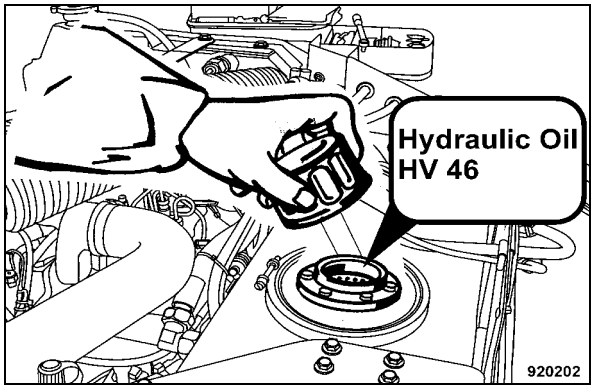

Fig. 169

- Fill in new hydraulic oil (Fig. 169).
- Perform a test run and check the system for leaks.

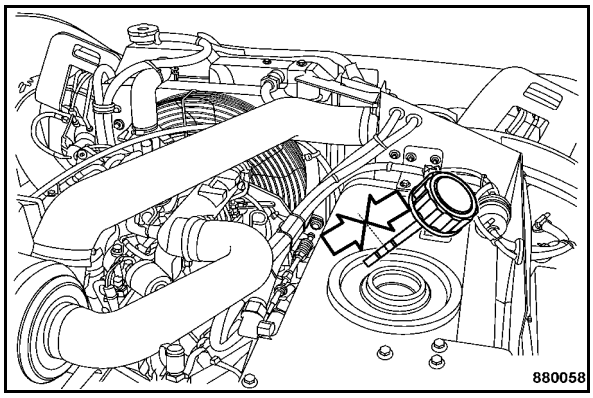

Fig. 170

- Check the hydraulic oil level on the dipstick (Fig. 170).

i Note

The breather filter for the hydraulic oil tank is integrated in the filler cap. You should therefore replace the complete filler cap.

- Close the tank with a new cover.

6.30 Changing the hydraulic oil filter

⚠ Danger

Danger of scalding!

Danger of scalding by hot oil when unscrewing the oil filter.

⚠ Caution

If the filter has to be changed together with the hydraulic oil, the filter must only be changed after the oil change and after the test run.

Do not use the oil in the filter bowl again.

Visible dirt may be an early sign for the failure of system components and indicate the possible failure of components. In this case determine the cause and replace or repair the defective components, if necessary. Negligence may cause destruction to the entire hydraulic system.

Do not clean or reuse the filter element.

Apart from the normal oil change intervals, the filter element must also be changed after major repairs in the hydraulic system.

Environment

Catch running out oil, dispose of oil and filter element environmentally.

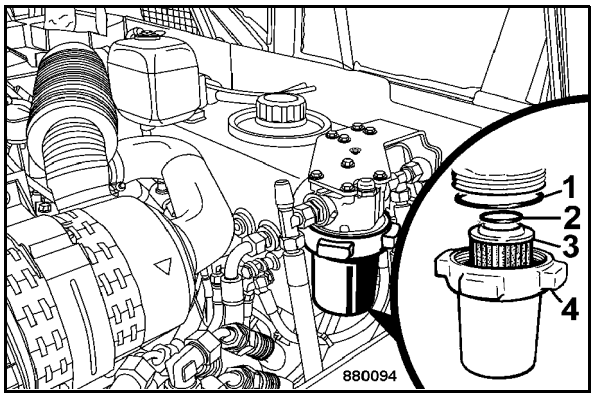

Fig. 171

- Remove filter bowl (4) (Fig. 171) with filter element (3).

- Examine the surface of the filter element thoroughly for any visible dirt.
- Take out the old filter element and clean filter bowl and thread.
- Reassemble the filter bowl with a new filter element and new loop rings (1) and (2).
- After a short test run check the filter for leaks.

6.31 Changing the coolant

Danger

Danger of scalding!

Change the coolant only when the engine is cold.

Do not remove the radiator cap when the engine is still hot.

Always wear gloves when handling anti-freeze agent.

Caution

Always screw the radiator cap tightly back on (second detent).

Always fill the engine cooling system with an anti-freeze mixture (corrosion protection).

Do not use more than 50% anti-freeze.

Do not mix different coolants and additives of any other kind. If necessary flush the cooling system 2-3 times with clear water.

For coolant quality refer to the "table of fuels and lubricants".

Environment

Catch running out coolant and dispose of environmentally.

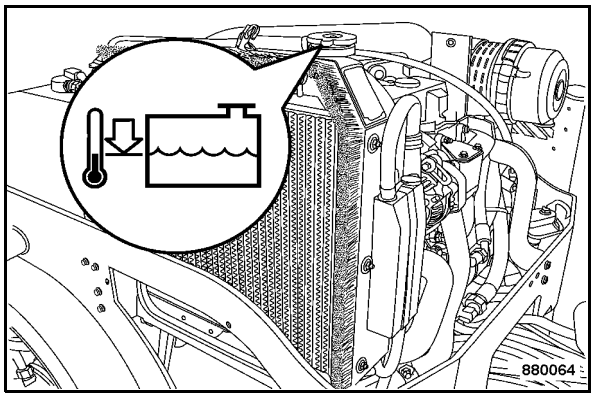

Fig. 172

- Remove the radiator cap (Fig. 172).
- Disassemble the left hand side plate from the front frame.

Every 2000 operating hours

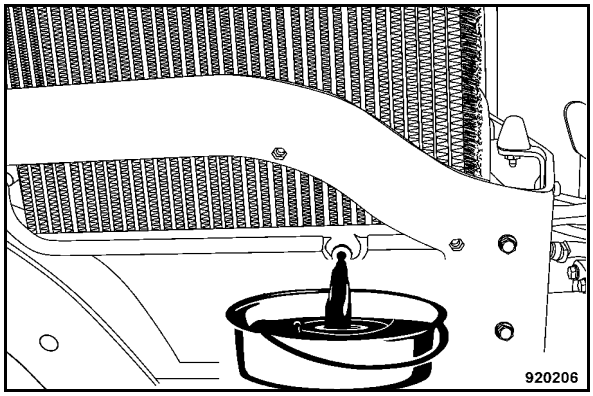

Fig. 173

- Unscrew the drain plug (Fig. 173).
- Drain the coolant completely off and collect it.
- Screw the drain plug back in.

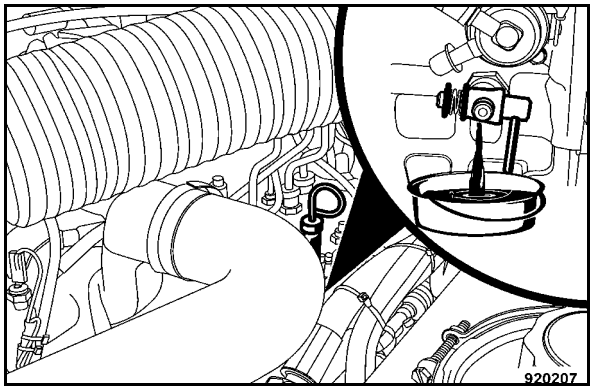

Fig. 174

- Open the drain tap (Fig. 174).
- Drain the coolant completely out of the engine block and collect it.
- Close the drain tap again.
- Empty the coolant compensation tank.
- Check the condition of radiator hoses, if necessary replace all radiator hoses.

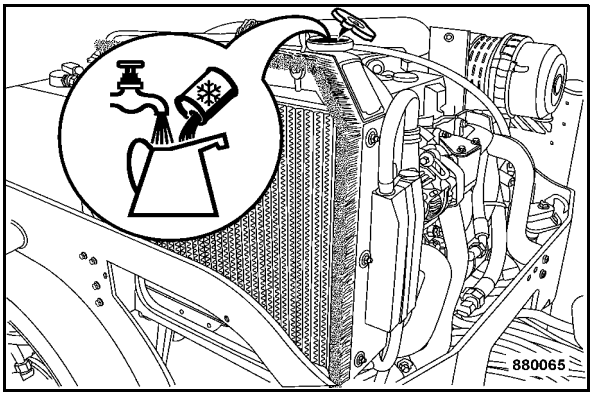

Fig. 175

- Fill in coolant until the level reaches the bottom edge of the filler socket (Fig. 175).

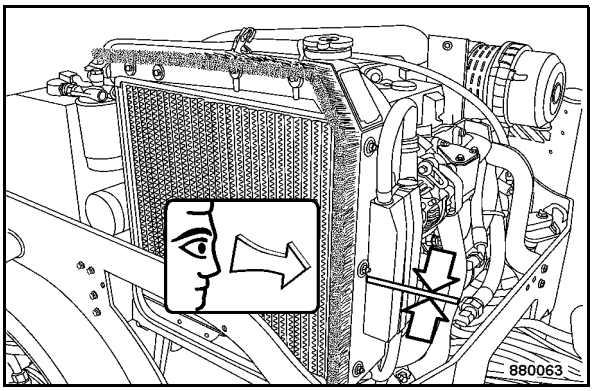

Fig. 176

- Fill in coolant up to the “MAX” mark (Fig. 176).

For quality and quantity of coolant refer to the "table of fuels and lubricants".

- Reattach the radiator cap and the cap of the compensation tank.
- Start the diesel engine and run it warm to operating temperature.
- Let the engine cool down and check the coolant level again, if necessary top up in the compensation tank.

6.32 Replacing the fuel lines

Danger

Fire hazard!

When working on the fuel system do not use open fire, do not smoke.

Do not spill any fuel.

Danger

Health hazard!

Do not inhale any fuel fumes.

Caution

For safety reasons this work should be performed every two years.

Hoses consist of rubber or plastic material and age over the course of time.

Environment

Catch running out fuel, do not let it seep into the ground.

- Replace all fuel hoses, including their hose clips.

6.33 Check the injection valves

Note

This work must only be performed by authorized service personnel.

Every 2000 operating hours

6.34 Checking the fuel injection pump

i Note

This work must only be performed by authorized service personnel.

Every 3000 operating hours

duma rent www.duma-rent.com

6.35 Checking the tire pressure

i Note

Only AC-machines

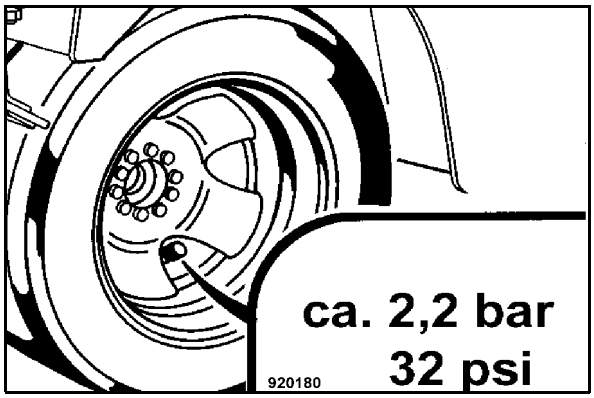

Fig. 177

- Check the tire pressure with a pressure gauge (Fig. 177).

Nominal value: approx.2.2 bar

i Note

Ensure equal pressure in all rubber tires!

6.36 Cleaning the water sprinkler system

i Note

If there is a risk of frost observe the special service instructions under "sprinkler system, maintenance in case of frost".

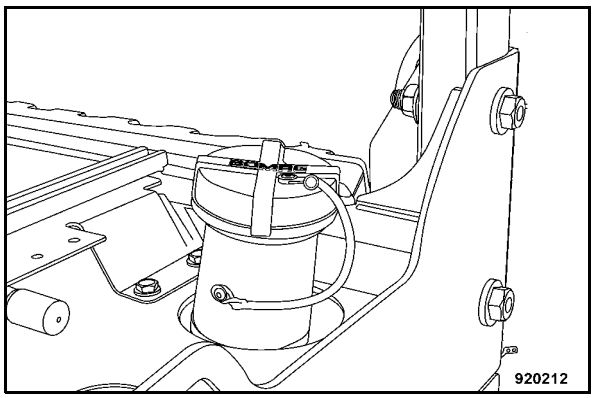

Fig. 178

- Remove the water tank cover (Fig. 178).

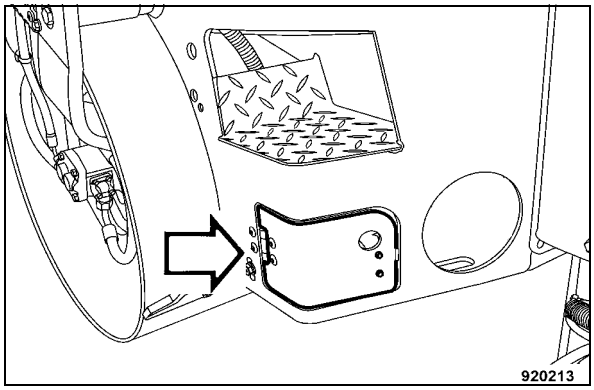

Fig. 179

- Open the covering flap (Fig. 179) on the right hand side of the rear frame.

As required

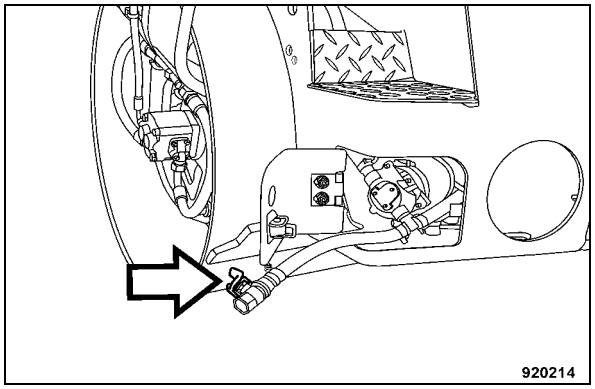

Fig. 180

- Take out the drain hose (Fig. 180).
- Open the drain tap, let all water run out and close the drain tap again.

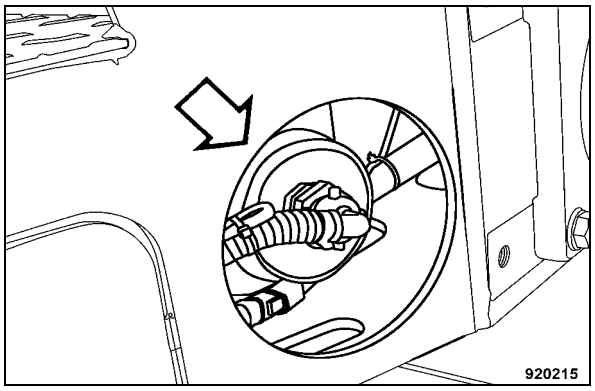

Fig. 181

- Unscrew the water hose at the water filter (Fig. 181).
- Unscrew the water filter from the water tank.
- Unscrew the filter element from the cover, clean it and screw it back onto the cover.
- Flush the water tank out with a strong water jet.
- Let all water with dirt run out.
- Screw the cover with the filter element back on.
- Unscrew the plastic caps from the end of the sprinkler tube.
- Fill the water tank with clean water.
- Activate the sprinkler system for a short while so that all lines are flushed out.
- Screw the olastic caps back on again.
- Check the function of the sprinkler tubes, if necessary clean or replace the nozzles.

Environment

Catch and dispose of old emulsion environmentally.

- Empty the emulsion tank[1].

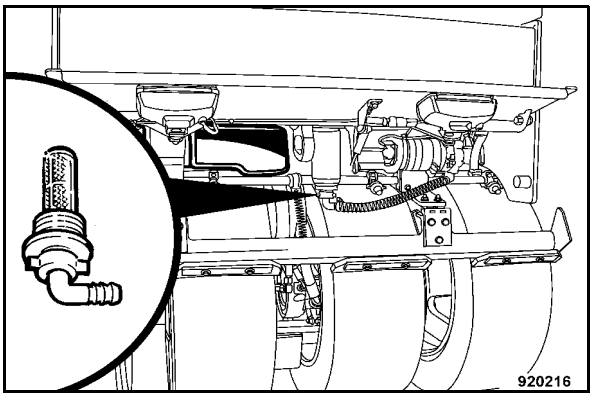

Fig. 182

- Loosen the fitting, take the emulsion filter (Fig. 182) out and clean it.
- Flush the emulsion tank thoroughly.
- Reinsert the emulsion filter and tighten the fitting.

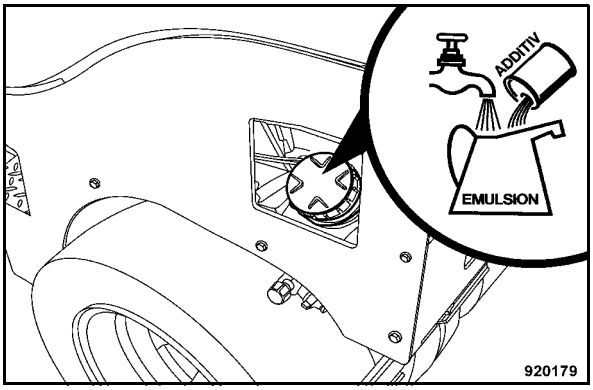

Fig. 183

- Fill the emulsion tank (Fig. 183).
- Check the function of the sprinkler tubes, if necessary clean or replace the nozzles.

1 AC-machines

6.37 Draining the water sprinkler system, maintenance in case of frost

⚠ Caution

If there is a risk of frost the water sprinkler system must be completely emptied or filled with an anti-freeze mixture.

In this case frost protection measures are of greatest importance in order to avoid freezing of sensitive components like pump, solenoid valve and water filter.

Draining the water sprinkler system

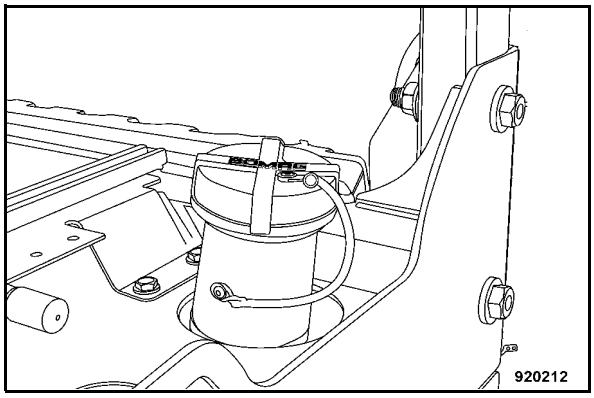

Fig. 184

- Remove the water tank cover (Fig. 184).

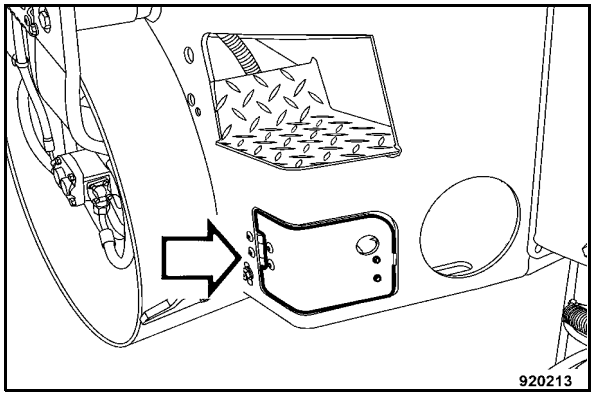

Fig. 185

- Open the covering flap (Fig. 185) on the right hand side of the rear frame.

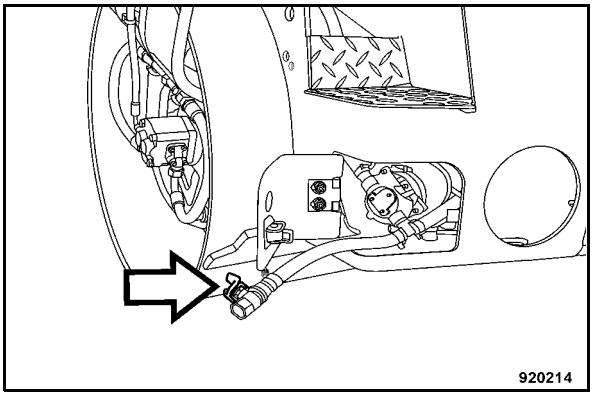

Fig. 186

- Take out the drain hose (Fig. 186), open the drain tap and let all water run out.

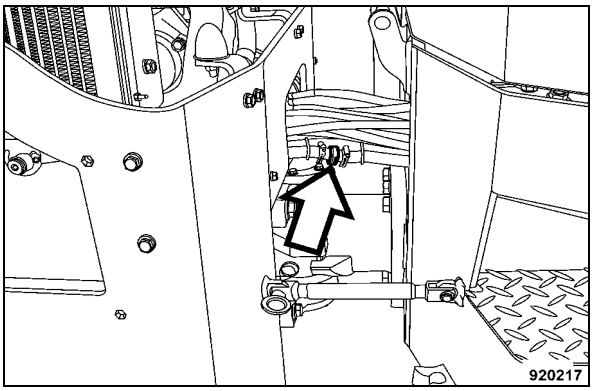

Fig. 187

- Open the hose coupling (Fig. 187) and let the water run out.

Filling the sprinkler system with anti-freeze mixture

- Close drain tap and drain hose.
- Join the hose couplings together.
- Fill the water tank with approx. 5 l of anti-freeze mixture (water and anti-freeze agent).
- Switch the sprinkler system on, until anti-freeze mixture comes running out of the sprinkler tubes.

Environment

After the frost period drain off the anti-freeze mixture and dispose of environmentally.

As required

6.38 Filling the provision tank for the windscreen washer system[1]

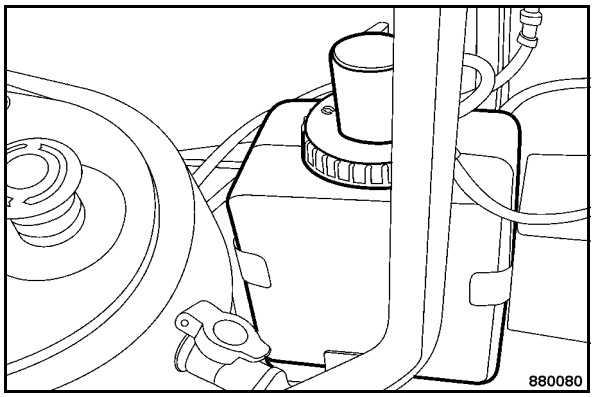

Fig. 188

- Check the fluid level in the tank (Fig. 188), top up if necessary.
- For winter operation fill in the appropriate amount of ant-freeze agent; refer to the specifications of the manufacturer of the ant-freeze agent.

1 Optional equipment

6.39 Tightening torques for screws with metric unified thread

Bolt dimensions	Tightening torques* ft - lb		
	8.8	10.9	12.9
M4	2	3	4
M5	4	7	7
M6	7	11	13
M8	18	26	33
M10	37	55	61
M12	65	91	108
M14	101	145	173
M16	156	221	264
M18	213	303	361
M20	304	426	513
M22	413	559	695
M24	524	738	885
M27	774	1092	1308
M30	1047	1482	1770

Fig. 189

* Strength classes for screws with untreated, non-lubricated surface. Screw quality designations are stamped on the screw heads.

8.8 = 8G

10.9 = 10K

12.9 = 12K

The values result in a 90% utilization of the screw's yield point at a coefficient of friction μ total = 0,14.

Compliance with the tightening torque is checked with torque wrenches.

The specified tightening torques do not apply when using MoS_2 lubricants.

i Note

Self-locking nuts must always be replaced once they have been unscrewed.

6.40 Engine conservation

If the engine is to be shut down for a longer period of time (e.g. over winter), we recommend to apply the following conserving measures to avoid corrosion:

- Clean the engine, including the cooling system: With cold cleansing agent and a water jet or, even better, with a steam cleaner.
- Run the engine warm and shut it down.
- Drain off the still hot engine oil and fill in anti-corrosion engine oil.
- Drain off the coolant and fill in system protection agent.
- Drain the fuel from the tank, mix it well with 10% anti-corrosion oil and fill it back in.
- Run the engine for 10 minutes until all lines, filters, pumps and nozzles with this conserving mixture and the new engine oil has been distributed to all parts.
- Now crank the engine several times (without ignition) to spray the combustion chambers.
- Take the V-belts off and spray the grooves of the V-belts with anti-corrosion oil. Remove the anti-corrosion oil before resuming operation.
- Close intake and exhaust openings tightly.

i Note

Depending on the weather conditions these conserving measures will provide protection for approx. 6 to 12 months.

Before taking the engine back into operation all conserving oil must be drained off and replaced by regular engine oil, see chapter "Fuels and Lubricants" according to the API-(MIL)-classification.

Anti-corrosion oils are those that comply with the specification MIL-L-21260 B or TL 9150-037/2 or Nato Code C 640/642.

A machine with a conserved engine must be marked by attaching a clearly visible warning tag.

As required

7 Trouble shooting

7.1 General notes

The following work must only be performed by professionally trained personnel or by our customer service.

Please observe strictly the safety regulations in the corresponding section of these operating and maintenance instructions.

Malfunctions are frequently caused by incorrect operation of the machine or insufficient maintenance. Whenever a fault occurs you should therefore thoroughly read these instruction on correct operation and maintenance.

If you cannot locate the cause of a fault or rectify it yourself by following the trouble shooting chart, you should contact our customer service department.

7.2 Engine

Faults	Possible cause	Remedy
The engine does not start	Fuel tank empty	Fill the tank
	Fuel filter clogged,in winter due to paraffin separation	Change the filter Use winter fuel
	Fuel lines leaking	Check all line connections for leakages and tighten the fittings.
	Travel lever not in "0"-position	Move the travel lever to "0"-position
	Battery discharged or not connected	Charge the battery, check the terminal clamps
	Operating error	see chapter "Starting the engine"
	Incorrect valve clearance	Adjust the valve clearance
	Lack of oil	Top up engine oil
	Emergency stop switch is engaged.	Emergency stop switch is unlocked.
The engine starts poorly and works irregularly with poor power	Battery power too low	Have the battery inspected
	Battery clamps loose or oxidized, causing the starter to turn too slowly	Clean the terminal clamps, tighten them and cover them with acid free grease
	Especially during winter: the use of too viscous engine oil	Use engine oil suitable for the ambient temperature
	Insufficient fuel supply, clogging of the fuel system due to paraffin separation in winter	Change the fuel filter Check the line connections for leaks and tighten the fittings. Use winter fuel in the cold season.
	Incorrect valve clearance	Adjust the valve clearance
	Injection valves or injection pump defective	Have examined by a specialist
	Air filter cartridge dirty	Clean, change if necessary
	Excessive play in the throttle cable	Adjust the throttle cable, change it if necessary
Engine loses power and speed, excessive exhaust smoke	Engine oil level too high	Drain the oil to the upper dipstick mark
	Poor fuel quality	Use specified fuel
	Air filter dirty	Clean, change if necessary
	Poor compression due to burned or broken compression rings or incorrect valve clearance	Have compression rings and pistons examined by a specialist, adjust the valve clearance
	Injection valve defective	Have examined by a specialist

Trouble shooting

Faults	Possible cause	Remedy
Engine overheats, shut down immediately!	Radiator excessively soiled	Clean the cooling fins
	Coolant level to low	Top up coolant.Danger! Only when the engine is cold
	Injection valve defective	Have examined by a specialist
	Engine oil level too low	Top up engine oil to the upper dipstick mark
	Filling capacity of the injection pump not correctly adjusted	Have adjusted by a specialist
	Lack of cooling air at the cooling air blower	Clean the cooling air duct
	V-belt loose or broken	Tension or replace the V-belt
	Air filter cartridge dirty	Clean, change if necessary
Engine oil pressure too low, shut down immediately	Leakages in the lubrication system, oil level too low	Check fittings on oil lines, lubrication oil filter for leaks, tighten the fittings if necessary. Top up lubrication oil up to the upper mark on the dipstick.
	Engine oil of wrong SAE-class	Change the engine oil.
The charge control light lights during operation	The generator does not charge the battery, because generator or regulator is defective	Have examined by a specialist

8 Disposal

8.1 Final shut-down of machine

If the machine can no longer be used and needs to be finally shut down you must carry out the following work and have the machine disassembled by an officially recognized specialist workshop.

⚠ Danger

Danger of cauterisation ! Danger of explosion!

When working on the battery do not use open fire, do not smoke!

The battery contains acid. Do not let acid come in contact with skin or clothes!

Wear protective clothing!

- Remove the batteries and dispose of in compliance with legal regulations.

Environment

Catch all fuels and lubricants, do not let them seep into the ground and dispose of in compliance with legal regulations.

- Empty the fuel tank.
- Drain the hydraulic oil tank.
- Drain coolant from engine and cooling system.
- Drain the lubrication oil from the engine.

⚠ Danger

Danger of explosion!

Parts that previously contained combustible fluids must not be cut with a cutting torch.

duma » rent
www.duma-rent.com

BOMAG

We will help you - immediately!

Operating, maintenance, repair instructions and spare parts catalogues

- in situ:

- Safe and simple trouble shooting
- Secure access to required spare parts
- Easy to understand – from experts for users

Contact us or your BOMAG distributor!

englisch

Head Office/Hauptsitz
BOMAG
Hellerwald
D-56154 Boppard
Germany
Telefon: +49 6742 100-0
Fax: +49 6742 3090
E-Mail: info@bomag.com

BOMAG FAYAT GROUP

BOMAG
Niederlassung Berlin
Gewerbestraße 3
15366 Hoppegarten
GERMANY
Tel.: +49 3342 369410
Fax: +49 3342 369436
e-mail: nlberlin@bomag.com.de

BOMAG
Niederlassung Boppard
Hellerwald
56154 Boppard
GERMANY
Tel.: +49 6742 100360
Fax: +49 6742 100392
e-mail: nlboppard@bomag.com

BOMAG
Niederlassung Chemnitz
Querstraße 6
09247 Chemnitz
GERMANY
Tel.: +49 3722 51590
Fax: +49 3722 515951
e-mail: nlchemnitz@bomag.com

BOMAG
Niederlassung Hannover
Dieselstraße 44
30827 Garbsen-Berenbostel
GERMANY
Tel.: +49 5131 70060
e-mail: nlhannover@bomag.de

BOMAG
Niederlassung München
Otto-Hahn-Ring 3
85301 Schweitenkirchen
GERMANY
Tel.: +49 8444 91840
e-mail: nlmuenchen@bomag.de

BOMAG
Niederlassung Stuttgart
Uferstraße 22
73630 Remshalden-Grunbach
GERMANY
Tel.: +49 7151 986293
e-mail: nlstuttgart@bomag.de

BOMAG (China) Construction
Machinery Co. , Ltd
No. 2808, west Huancheng Road,
Shanghai Comprehensive Industrial
Zone Fengxian Shanghai 201401
CHINA
Tel.: +86 21 3365 5566
Fax: +86 21 3365 5508
e-mail: china@bomag.com

BOMAG France S.A.S.
2, avenue du Général de Gaulle
91170 VIRY-CHATILLON
FRANCE
Tel.: +33 1 69578600
Fax: +33 1 69962660
e-mail: france@bomag.com

BOMAG (GREAT BRITAIN), LTD
Sheldon Way, Larkfield
Aylesford
Kent ME20 6SE
GREAT BRITAIN
Tel.: +44 1622 716611
Fax: +44 1622 710233
e-mail: gb@bomag.com

BOMAG Italia Srl.
Via Roma 50
48011 Alfonsine
ITALY
Tel.: +39 0544 864235
Fax: +39 0544 864367
e-mail: italy@bomag.com

BOMAG (CANADA), INC.
3455 Semenyk Court
Missisauga, Ontario
CANADA
Tel.: +1 905 361 9961
Fax: +1 905 361 9962
e-mail: canada@bomag.com

BOMAG Maschinenhandelsgesellschaft
m.b.H.
Porschestraße 9
1230 Wien
Tel.: +43 1 69040-0
Fax: +43 1 69040-20
e-mail: austria@bomag.com

FAYAT BOMAG Polska Sp. z.o.o.
Ul. Szyszkowa 52
02-285 Warzawa
POLAND
Tel.: +48 22 4820400
Fax: +48 22 4820401
e-mail: poland@bomag.com

FAYAT BOMAG Rus OOO
Klyazma block, h 1-g
141400 Khimki, Moscow region, RF
RUSSIA
Tel.: +7 (495) 2879290
Fax: +7 (495) 2879291
e-mail: russia@bomag.com

BOMAG GmbH, Singapore
300, Beach Road
The Concourse, , 18-06
Singapore 199555
SINGAPORE
Tel.: +65 294 1277
Fax: +65 294 1377
e-mail: singapore@bomag.com

BOMA Equipment Hong Kong LTD
Room 1003, 10/F Charm Centre
700, Castle Peak Road
Kowloon,
HONG KONG
Tel.: +852 2721 6363
Fax: +852 2721 3212
e-mail: bomahk@bomag.com

BOMAG Americas, Inc.
2000 Kentville Road
Kewanee, Illinois 61443
U.S.A.
Tel.: +1 309 8533571
Fax: +1 309 8520350
e-mail: usa@bomag.com

Printed in Germany